L Series Lab Fittings
LGF3-A12B-25

CHICAGO FAUCETS
Geberit Group

Product Type

Deck-mounted laboratory turret with fine needle valve

Features & Specifications

- Laboratory nozzle with 10 serrations for laboratory hose
- Vandal Proof 2-1/2" cross handle

Performance Specification

- Rated Operating Pressure: 29.92 Hg

Warranty

- 5-Year Limited Faucet Warranty
- Lifetime Limited Faucet Warranty
- 1-Year Limited Finish Warranty
- 5-Year Limited Mechanical Warranty

Codes & Standards

- ANSI Z21.15b/CSA 9.1b

Job Name _____

Item Number _____

Section/Tag _____

Model Specified _____

Architect _____

Engineer _____

Contractor _____

[ ] Submitted as Shown [ ] Submitted with Variations

Date _____

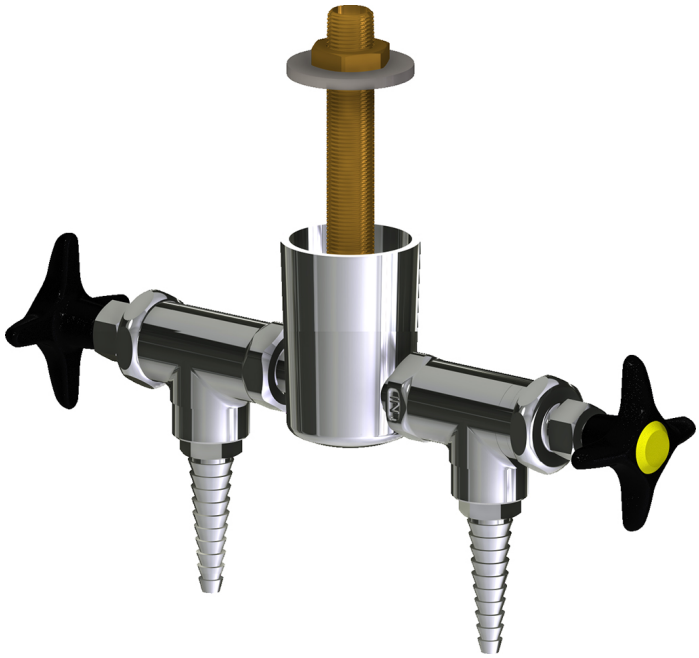

2100 South Clearwater Drive
Des Plaines, IL
P: 847/803-5000
F: 847/803-5454
Technical: 800/TEC-TRUE
www.chicagofaucets.com

LGF3-A12B-25

Architect/Engineer Specification

Chicago Faucets No. LGF3-A12B-25 Deck-mounted laboratory turret with fine needle valve, polished chrome finish. Laboratory nozzle with 10 serrations for laboratory hose. 2-1/2" cross handle, black nylon. Laboratory index button, Yellow with black letters, VAC (Vacuum).

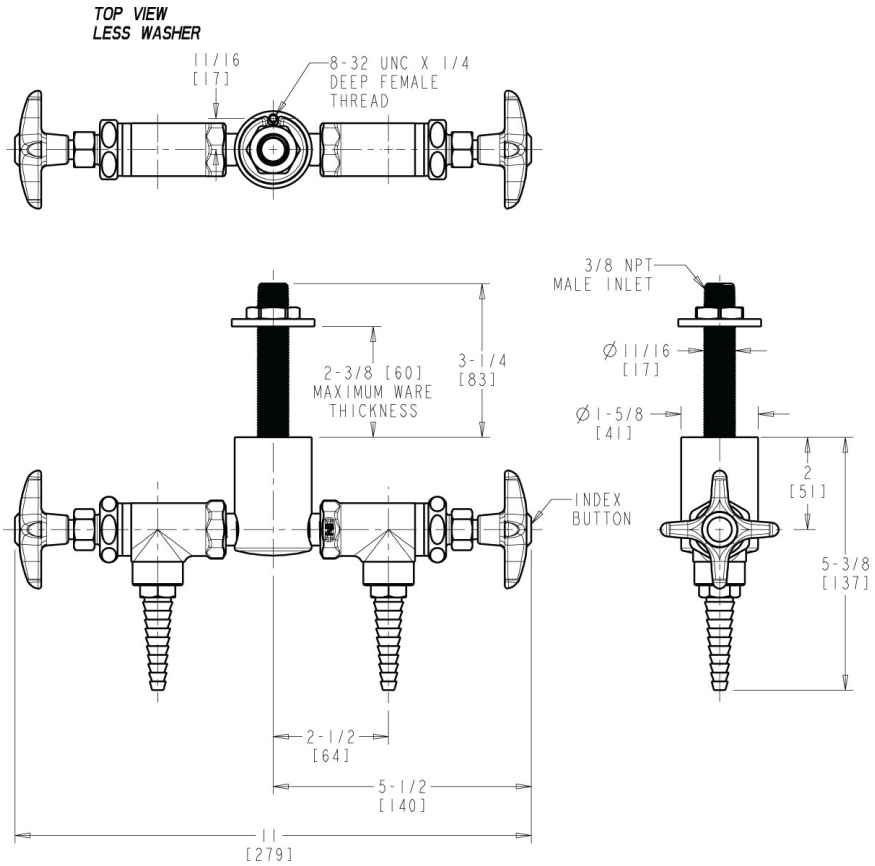

Operation and Maintenance

Installation should be in accordance with local plumbing codes. Flush all pipes thoroughly before installation. After installation, remove spout outlet or flow control and flush faucet thoroughly to clear any debris. Care should be taken when cleaning the product. Do not use abrasive cleaners, chemicals or solvents as they can result in surface damage. Use mild soap and warm water for cleaning and protecting the life of Chicago Faucet products. For specific operation and maintenance refer to the installation instructions and repair parts documents that are located at www.chicagofaucets.com.

Chicago Faucets, member of the Geberit Group, is the leading brand of commercial faucets and fittings in the United States, offering a complete range of products for schools, laboratories, hospitals, office buildings, food service, airports and sport facilities. Call 1.800.TECTRUE or 1.847.803.5000 Option 1 for installation or other technical assistance.

2100 South Clearwater Drive
Des Plaines, IL
P: 847/803-5000
F: 847/803-5454
Technical: 800/TEC-TRUE
www.chicagofaucets.com