L Series Lab Fittings
LCF1-BC-C1B1

CHICAGO FAUCETS
Geberit Group

Product Type

Deck-mounted triple service combination valve

Features & Specifications

- 6" rigid/swing gooseneck spout with atmospheric vacuum breaker
- Laboratory nozzle with 10 serrations for laboratory hose
- Vandal Proof 2-1/2" cross handle with button indexed 'CW'
- Slow compression Control-A-Flo operating cartridge, left-hand

Performance Specification

- Rated Operating Pressure: Water: 20-125 PSI max.; Air: 125 PSI max.; Vacuum: 29.92 Hg; Gas: 7.25 PSI max.
- Rated Operating Temperature: Water: 40-140°F

Warranty

- 5-Year Limited Faucet Warranty
- Lifetime Limited Faucet Warranty
- 1-Year Limited Finish Warranty
- 5-Year Limited Mechanical Warranty

Codes & Standards

- ASME A112.18.1/CSA B125.1
- ANSI Z21.15b/CSA 9.1b

Job Name _____

Item Number _____

Section/Tag _____

Model Specified _____

Architect _____

Engineer _____

Contractor _____

[ ] Submitted as Shown [ ] Submitted with Variations

Date _____

2100 South Clearwater Drive
Des Plaines, IL
P: 847/803-5000
F: 847/803-5454
Technical: 800/TEC-TRUE
www.chicagofaucets.com

LCF1-BC-C1B1

Architect/Engineer Specification

Chicago Faucets No. LCF1-BC-C1B1 Deck-mounted triple service combination valve, polished chrome finish. 6" rigid/swing gooseneck spout with atmospheric vacuum breaker. Laboratory nozzle with 10 serrations for laboratory hose. Slow compression Control-A-Flo operating cartridge, left-hand turn. 2-1/2" cross handle with button indexed 'CW'.

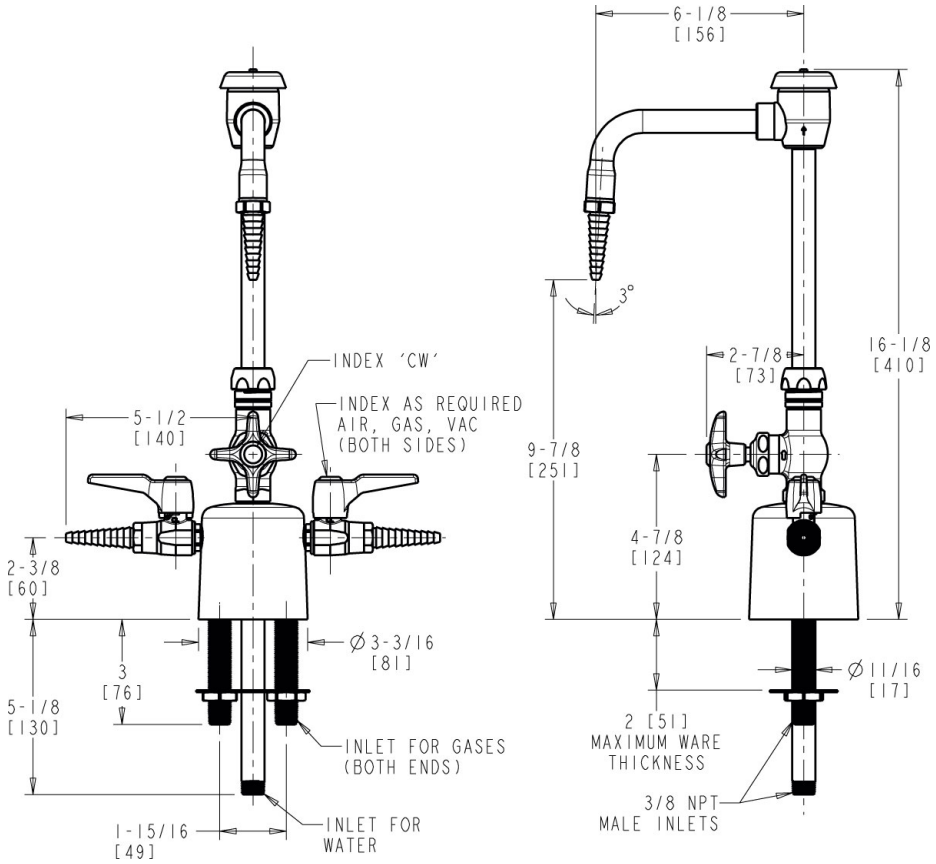

Operation and Maintenance

Installation should be in accordance with local plumbing codes. Flush all pipes thoroughly before installation. After installation, remove spout outlet or flow control and flush faucet thoroughly to clear any debris. Care should be taken when cleaning the product. Do not use abrasive cleaners, chemicals or solvents as they can result in surface damage. Use mild soap and warm water for cleaning and protecting the life of Chicago Faucet products. For specific operation and maintenance refer to the installation instructions and repair parts documents that are located at www.chicagofaucets.com.

Chicago Faucets, member of the Geberit Group, is the leading brand of commercial faucets and fittings in the United States, offering a complete range of products for schools, laboratories, hospitals, office buildings, food service, airports and sport facilities. Call 1.800.TECTRUE or 1.847.803.5000 Option 1 for installation or other technical assistance.

2100 South Clearwater Drive
Des Plaines, IL
P: 847/803-5000
F: 847/803-5454
Technical: 800/TEC-TRUE
www.chicagofaucets.com