900 Series Lab Fittings
929-E22E7CP

CHICAGO FAUCETS®
Geberit Group

Product Type

Deck-mounted manual laboratory faucet, single-hole, dual-supply

Features & Specifications

- Single-hole
- 5-1/4" rigid/swing gooseneck spout
- Vandal Proof 2-1/2" cross handle with index button
- Slow compression operating cartridge, left-hand
- Slow compression operating cartridge, right-hand
- Inline atmospheric vacuum breaker
- Complies with the requirements of the Buy American Act of 1933.

Performance Specification

- Rated Operating Pressure: 20-125 PSI
- Rated Operating Temperature: 40-140°F

Warranty

- 5-Year Limited Faucet Warranty
- Lifetime Limited Faucet Warranty
- 1-Year Limited Finish Warranty
- 5-Year Limited Mechanical Warranty

Codes & Standards

- ASME A112.18.1/CSA B125.1
- ASSE 1035 Compliant
- NSF/ANSI 372 Low Lead Content

Job Name _____

Item Number _____

Section/Tag _____

Model Specified _____

Architect _____

Engineer _____

Contractor _____

[ ] Submitted as Shown [ ] Submitted with Variations

Date _____

2100 South Clearwater Drive
Des Plaines, IL
P: 847/803-5000
F: 847/803-5454
Technical: 800/TEC-TRUE
www.chicagofaucets.com

929-E22E7CP

CHICAGO FAUCETS
Geberit Group

Architect/Engineer Specification

Chicago Faucets No. 929-E22E7CP, Sink Faucet for hot and cold water, single-hole deck mount, chrome plated. Rigid/swing gooseneck spout, 5-1/4" center-to-center. Laboratory serrated, full-flow nozzle with backflow preventer. 2-1/2" metal, vandal-proof, cross handles with eight-point, tapered broach and buttons indexed "CW" and "HW". Slow compression rebuildable cartridge, opens and closes 360° for fine adjustment, closes with water pressure, features square, tapered stem. Flexible supply hoses with 3/8" compression fitting. Dual-check vacuum breakers for laboratory faucets are used for non-continuous pressure, health hazard applications and are backsiphonage, backflow preventers. This series is specially made for laboratory faucets where portable hoses can be attached and prevent the flow of contaminated water back into the potable water supply. These vacuum breakers can be installed on new or existing faucets without plumbing changes. This product is tested and certified to industry standards: ASME A112.18.1/CSA B125.1, Compliant with ASSE 1035, and Certified to NSF/ANSI 61, Section 9.

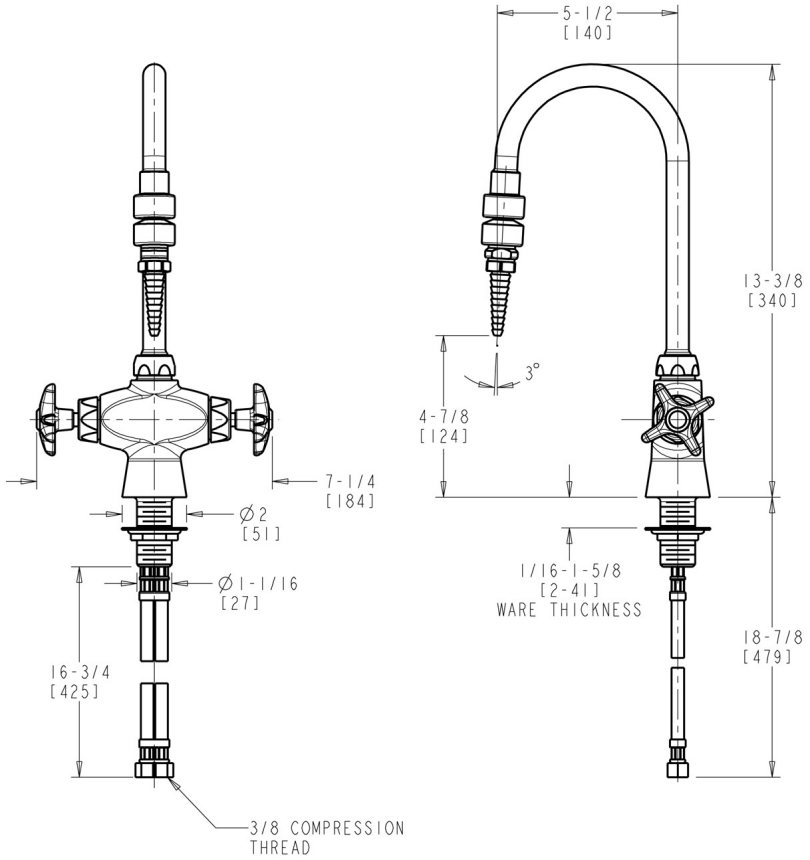

Operation and Maintenance

Installation should be in accordance with local plumbing codes. Flush all pipes thoroughly before installation. After installation, remove spout outlet or flow control and flush faucet thoroughly to clear any debris. Care should be taken when cleaning the product. Do not use abrasive cleaners, chemicals or solvents as they can result in surface damage. Use mild soap and warm water for cleaning and protecting the life of Chicago Faucet products. For specific operation and maintenance refer to the installation instructions and repair parts documents that are located at www.chicagofaucets.com.

Chicago Faucets, member of the Geberit Group, is the leading brand of commercial faucets and fittings in the United States, offering a complete range of products for schools, laboratories, hospitals, office buildings, food service, airports and sport facilities. Call 1.800.TECTRUE or 1.847.803.5000 Option 1 for installation or other technical assistance.

2100 South Clearwater Drive
Des Plaines, IL
P: 847/803-5000
F: 847/803-5454
Technical: 800/TEC-TRUE
www.chicagofaucets.com