Manual Sink Faucets
410-T41E37VPABCP

CHICAGO FAUCETS
Geberit Group

Product Type

Deck-mounted manual faucet with built-in ASSE 1070 certified scald protection

Features & Specifications

- Single-hole
- Vandal Proof Pressure compensating laminar flow non-aerating outlet 1.5 GPM
- Vandal Proof 4-1/4" lever handle
- Ceramic cartridge with built-in check valve and thermostatic element
- ECAST® design provides durable cast brass construction with total lead content equal to or less than 0.25% by weighted average

Performance Specification

- Rated Operating Pressure: 20-125 PSI
- Rated Operating Temperature: Cold Water Inlet Temperature Range: 39°F – 80°F (4°C – 27°C); Hot Water Inlet Temperature Range: 120°F – 180°F (49°C – 82°C); Maximum output temperature: 105°F (41°C) ±1°; Minimum approved flow rate for temp limiting: 0.35 GPM; Maximum approved flow rate for temp limiting: 2.2 GPM; During Cold Water Supply Failure: Prior to the reduction in the flow to 20% of the manufacturer's minimum rated flow, or 0.8 L/min (0.2 gpm), whichever is greater, the outlet temperature will not exceed 120°F (49°C)

Warranty

- 1-Year Limited Cartridge Warranty
- 5-Year Limited Cartridge Warranty
- Lifetime Limited Faucet Warranty
- 1-Year Limited Material Warranty

Codes & Standards

- ASME A112.18.1/CSA B125.1
- ADA ANSI/ICC A117.1
- Certified per ASSE 1070 / ASME A112.1070 / CSA B125.70
- NSF/ANSI 372 Low Lead Content
- NSF/ANSI/CAN 61: Q ≤ 1
- Certified to WaterSense by ICC-ES

Job Name _____

Item Number _____

Section/Tag _____

Model Specified _____

Architect _____

Engineer _____

Contractor _____

[ ] Submitted as Shown [ ] Submitted with Variations

Date _____

ECAST

ECAST products are intended for installation where state laws and local codes mandate lead content levels or in any location where lead content is a concern.

2100 South Clearwater Drive
Des Plaines, IL
P: 847/803-5000
F: 847/803-5454
Technical: 800/TEC-TRUE
www.chicagofaucets.com

410-T41E37VPABCP

Architect/Engineer Specification

Chicago Faucets No. 410-T41E37VPABCP, Sink Faucet for hot and cold water, single-hole deck mount, single lever, chrome plated. Rigid, cast brass spout, 4-1/2" center-to-center. 1.5 GPM (5.7 L/min) vandal-resistant, pressure compensating, non-aerating, laminar outlet. Ceramic mixing cartridge, includes thermostatic scald protection. Cartridge includes Integral inlet check valves to protect against cross-flow. Flexible supply hoses included. ECAST® construction with less than 0.25% lead content by weighted average. This product meets ADA ANSI/ICC A117.1 requirements and is tested and certified to industry standards: ASME A112.18.1/CSA B125.1, ASSE 1070/ASME A112.1070/CSA B125.70, Certified to NSF/ANSI 61, Section 9, California Health and Safety Code 116875 (AB1953-2006), Vermont Bill S.152, and NSF/ANSI 372 Low Lead Content.

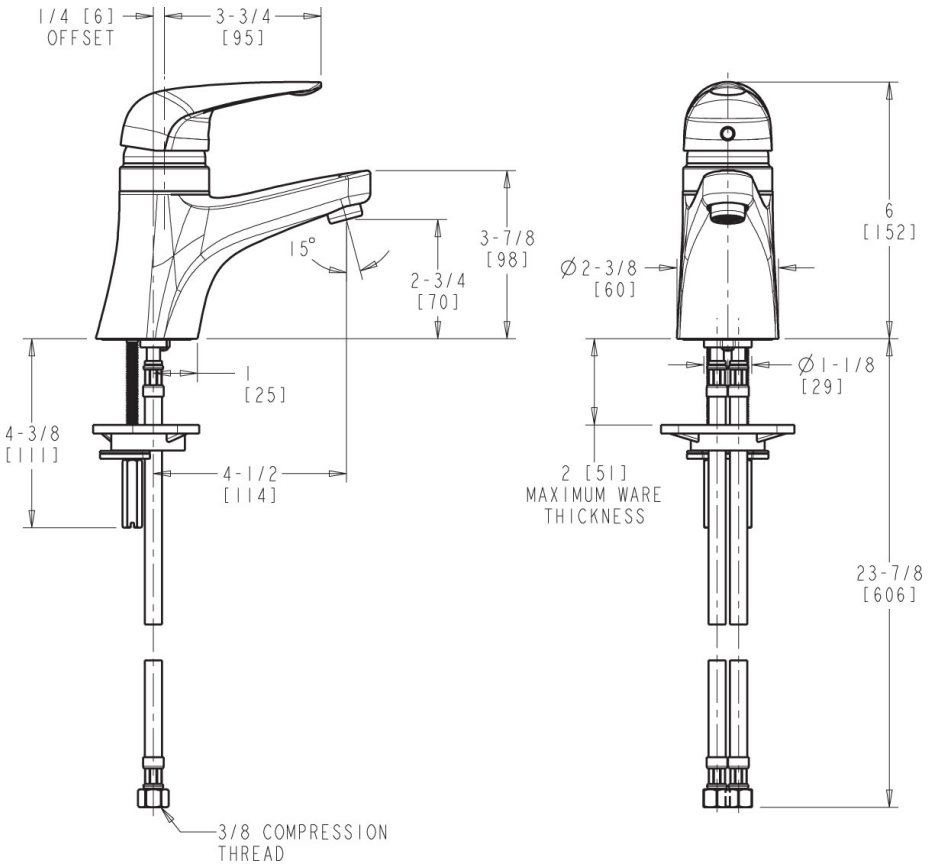

Operation and Maintenance

Installation should be in accordance with local plumbing codes. Flush all pipes thoroughly before installation. After installation, remove spout outlet or flow control and flush faucet thoroughly to clear any debris. Care should be taken when cleaning the product. Do not use abrasive cleaners, chemicals or solvents as they can result in surface damage. Use mild soap and warm water for cleaning and protecting the life of Chicago Faucet products. For specific operation and maintenance refer to the installation instructions and repair parts documents that are located at www.chicagofaucets.com.

Chicago Faucets, member of the Geberit Group, is the leading brand of commercial faucets and fittings in the United States, offering a complete range of products for schools, laboratories, hospitals, office buildings, food service, airports and sport facilities. Call 1.800.TECTRUE or 1.847.803.5000 Option 1 for installation or other technical assistance.

2100 South Clearwater Drive
Des Plaines, IL
P: 847/803-5000
F: 847/803-5454
Technical: 800/TEC-TRUE
www.chicagofaucets.com