Touchless Faucets
116.926.AB.1

CHICAGO FAUCETS®
Geberit Group

Product Type

Touch-free, programmable faucet with above-deck electronics

Features & Specifications

- Single-hole
- HyTronic® Traditional spout
- Vandal Proof Pressure compensating laminar flow non-aerating outlet
- ECAST® design provides durable cast brass construction with total lead content equal to or less than 0.25% by weighted average

Performance Specification

- Rated Operating Pressure: 20-125 PSI
- Rated Operating Temperature: 40-140°F

Warranty

- 3-Year Limited Electronics and Solenoid Warranty
- 5-Year Limited Faucet Warranty
- Lifetime Limited Faucet Warranty
- 1-Year Limited Finish Warranty
- 5-Year Limited Mechanical Warranty

Codes & Standards

- ADA ANSI/ICC A117.1
- ASME A112.18.1/CSA B125.1
- ASSE 1070/ASME A112.1070/CSA B125.70
- Complies with CALGreen requirements
- NSF/ANSI 372 Low Lead Content
- NSF/ANSI 61, Section 9

Job Name _____

Item Number _____

Section/Tag _____

Model Specified _____

Architect _____

Engineer _____

Contractor _____

[ ] Submitted as Shown [ ] Submitted with Variations

Date _____

No Image Available

ECAST

ECAST products are intended for installation where state laws and local codes mandate lead content levels or in any location where lead content is a concern.

2100 South Clearwater Drive
Des Plaines, IL
P: 847/803-5000
F: 847/803-5454
Technical: 800/TEC-TRUE
www.chicagofaucets.com

116.926.AB.1

CHICAGO FAUCETS
Geberit Group

Architect/Engineer Specification

Chicago Faucets No. 116.926.AB.1, E-Tronic 40 electronic faucet with dual-beam infrared sensor. Traditional-style spout, chrome plated. Single-hole deck mount. 1.0 GPM (3.8 L/min) pressure compensating, vandal-proof, non-aerating, laminar outlet. Self Sustaining Power System (SSPS): water turbine generates the necessary power, even with low flow outlets, to operate the faucet for 10+ years. Multiple field-adjustable modes and ranges. Compatible with Chicago Faucets Commander™ handheld programming unit. Thermostatic Mixing Valve. ECAST® construction with less than 0.25% lead content by weighted average. CALGreen compliant. This product meets ADA ANSI/ICC A117.1 requirements and is tested and certified to industry standards: ASME A112.18.1/CSA B125.1, Certified to NSF/ANSI 61, Section 9, ASSE 1070, California Health and Safety Code 116875 (AB1953-2006), Vermont Bill S.152, NSF/ANSI 372 Low Lead Content, and California Green Building Standards Code (CALGreen).

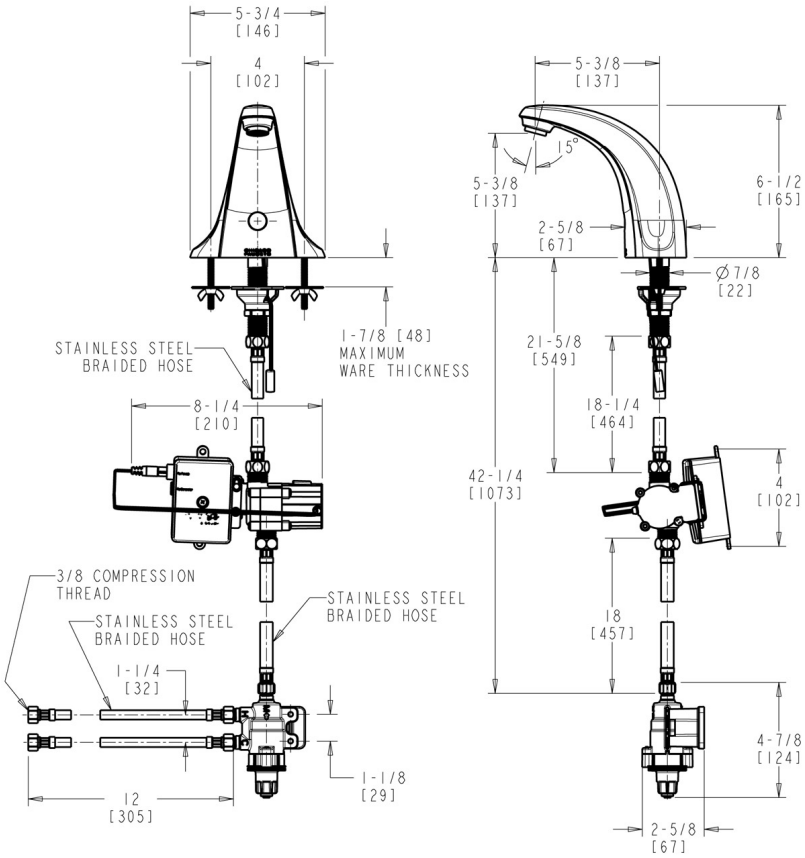

Operation and Maintenance

Installation should be in accordance with local plumbing codes. Flush all pipes thoroughly before installation. After installation, remove spout outlet or flow control and flush faucet thoroughly to clear any debris. Care should be taken when cleaning the product. Do not use abrasive cleaners, chemicals or solvents as they can result in surface damage. Use mild soap and warm water for cleaning and protecting the life of Chicago Faucet products. For specific operation and maintenance refer to the installation instructions and repair parts documents that are located at www.chicagofaucets.com.

Chicago Faucets, member of the Geberit Group, is the leading brand of commercial faucets and fittings in the United States, offering a complete range of products for schools, laboratories, hospitals, office buildings, food service, airports and sport facilities. Call 1.800.TECTRUE or 1.847.803.5000 Option 1 for installation or other technical assistance.

U.S. GREEN BUILDING COUNCIL MEMBER

2100 South Clearwater Drive
Des Plaines, IL
P: 847/803-5000
F: 847/803-5454
Technical: 800/TEC-TRUE
www.chicagofaucets.com