Accessories & Parts
152-ADCP

CHICAGO FAUCETS
Geberit Group

Product Type

Auto-drain hose assembly 2.5 GPM, with 24" ADA grab bar

Features & Specifications

- 24" wall-mounted ADA grab bar with hand spray holder
- 2.5 GPM hand spray with pause control, two 34" stainless steel hoses with automatic hose drain
- Polished chrome finish
- 2.5 GPM (9.5 L/min)

Warranty

- 5-Year Limited Cartridge Warranty
- Lifetime Limited Faucet Warranty
- 1-Year Limited Finish Warranty

Codes & Standards

- ADA ANSI/ICC A117.1
- NOTE: This fitting is not intended to be sold in California after January 1, 2016
- UPC

Job Name _____

Item Number _____

Section/Tag _____

Model Specified _____

Architect _____

Engineer _____

Contractor _____

[ ] Submitted as Shown [ ] Submitted with Variations

Date _____

2100 South Clearwater Drive
Des Plaines, IL
P: 847/803-5000
F: 847/803-5454
Technical: 800/TEC-TRUE
www.chicagofaucets.com

152-ADCP

Architect/Engineer Specification

Chicago Faucets No. 152-ADCP, Automatic Drain hose assembly, 2.5 GPM (9.5 L/min) hand spray with pause control; two 34" stainless steel hoses with automatic hose drain and 24" wall-mounted ADA grab bar with hand spray holder. This product meets ADA ANSI/ICC A117.1 requirements.

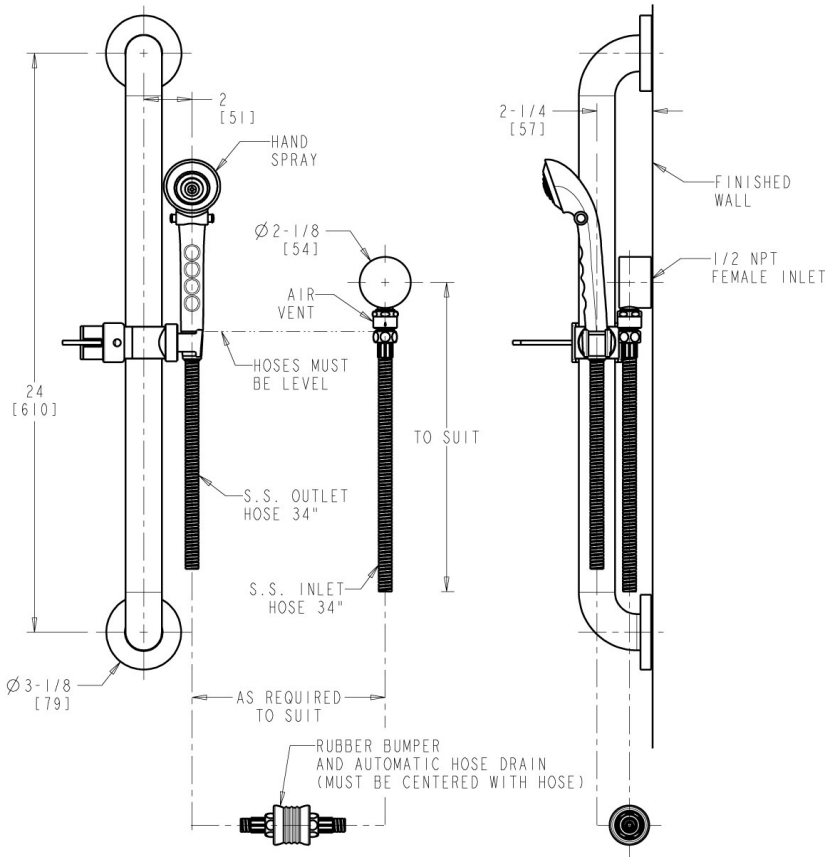

Operation and Maintenance

Installation should be in accordance with local plumbing codes. Flush all pipes thoroughly before installation. After installation, remove spout outlet or flow control and flush faucet thoroughly to clear any debris. Care should be taken when cleaning the product. Do not use abrasive cleaners, chemicals or solvents as they can result in surface damage. Use mild soap and warm water for cleaning and protecting the life of Chicago Faucet products. For specific operation and maintenance refer to the installation instructions and repair parts documents that are located at www.chicagofaucets.com.

Chicago Faucets, member of the Geberit Group, is the leading brand of commercial faucets and fittings in the United States, offering a complete range of products for schools, laboratories, hospitals, office buildings, food service, airports and sport facilities. Call 1.800.TECTRUE or 1.847.803.5000 Option 1 for installation or other technical assistance.

2100 South Clearwater Drive
Des Plaines, IL
P: 847/803-5000
F: 847/803-5454
Technical: 800/TEC-TRUE
www.chicagofaucets.com