PARTS LIST

BY: SID	CHICAGO FAUCETS	FINISH:	AS SPECIFIED
CHK'D:	Last As Long As The Building	DATE:	08-21-02

797-V1000

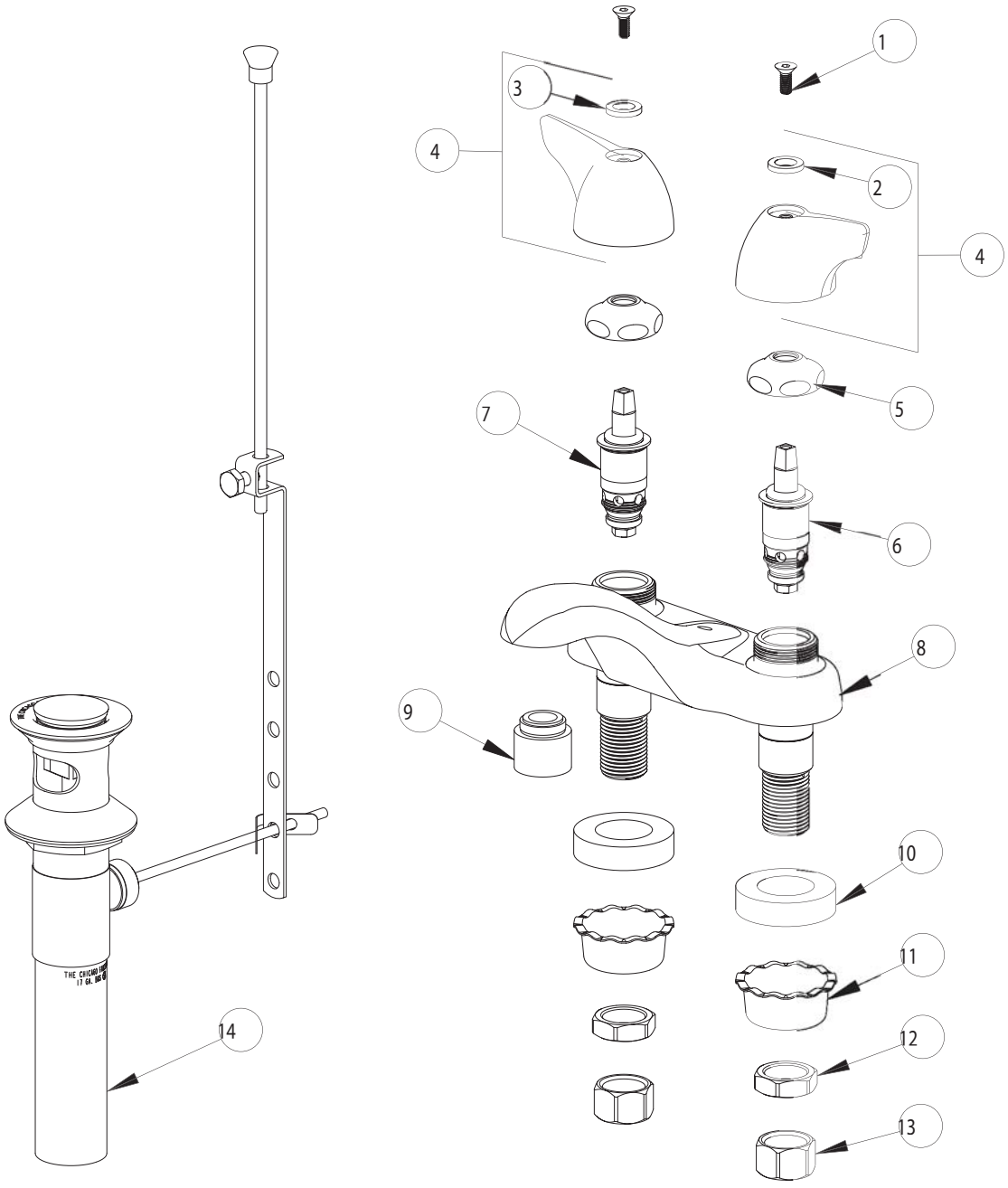

ITEM NO.	PART NO.	DESCRIPTION	ITEM NO.	PART NO.	DESCRIPTION
1	420-020	SCREW, 1/8 FLAT HEX HEAD X 1/2	9	E12VP	SOFTFLO ASSEMBLY
2	633-123	INDEX BUTTON (BLUE)	10	555-313	WASHER
3	633-023	INDEX BUTTON (RED)	11	1797-114	BASIN COCK WASHER
4	1000PR	WING HANDLE ASSEMBLY	12	49-004	LOCKNUT
5	1-214	CAP	13	49-005	COUPLING NUT
6	1-099XT	QUATURN UNIT (RH)	14	1222K	POP-UP WASTE FOR PARTS SEE 1222K
7	1-100XT	QUATURN UNIT (LH)			
8	------	VALVE BODY (NOT SOLD SEPARATELY)			