CHICAGO FAUCETS®
a Geberit company

2100 South Clearwater Drive
Des Plaines, IL 60018
Phone: 847-803-5000
Fax: 847-803-5454
www.chicagofaucets.com

FOR TECHNICAL ASSISTANCE
1-800-TEC-TRUE (1-800-832-8783)

REPAIR PARTS

BY: SID | DATE: 05-13-16
CHK: | REV:

FITTING NO.
201-AGN2AE35ABCP
SUBMITTED MODEL NO.
ITEM NO.

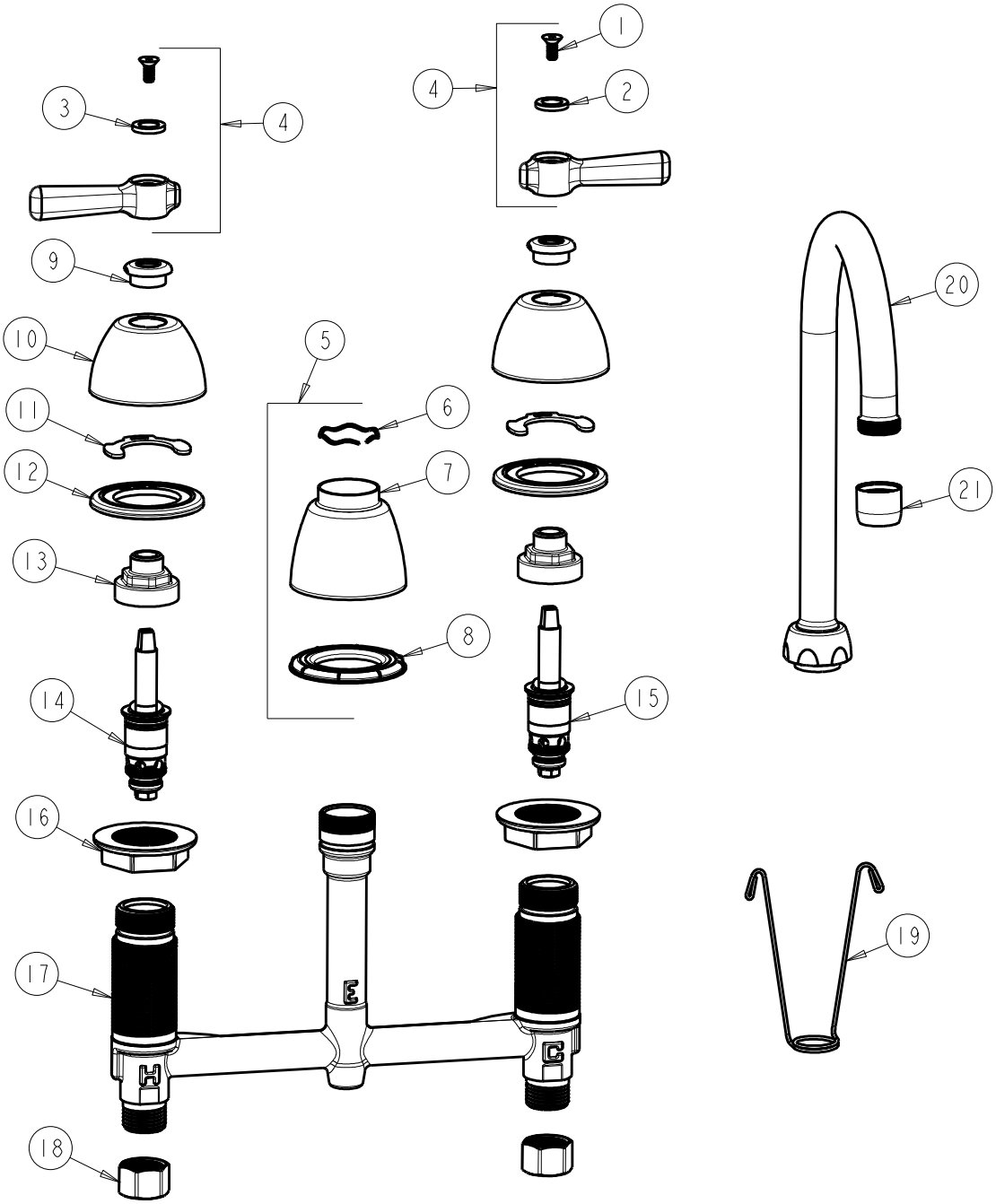

ITEM	PART NO.	DESCRIPTION	ITEM	PART NO.	DESCRIPTION
1	420-020JKNF	SCREW, 1/8 FLAT HEX HEAD X 1/2	12	888-026JKNF	WASHER, SEALING
2	633-123JKNF	INDEX BUTTON (BLUE)	13	274-014JKRBF	NUT, CAP
3	633-023JKNF	INDEX BUTTON (RED)	14	377-XTLHJKABNF	LH QUATURN CARTRIDGE
4	369-PRJKCP	HANDLE, 2-3/8" LEVER (PAIR)	15	377-XTRHJKABNF	RH QUATURN CARTRIDGE
5	785-400KJKCP	KIT, SPOUT ESCUTCHEON	16	250-004JKNF	LOCKNUT
6	50-038JKNF	WAVE WASHER	17	------	BODY, VALVE
7	785-400JKCP	ESCUTCHEON, SPOUT BASE	18	49-005JKRBF	COUPLING NUT
8	888-027JKNF	SPOUT ESCUTCHEON WASHER	19	200-008JKNF	HANGER
9	422-113JKCP	ESCUTCHEON NUT	20	GN2AJKABCP	SPOUT, GN SPOUT 5-1/4" C-C
10	250-082JKCP	ESCUTCHEON	21	E35JKABCP	OUTLET, AERATOR 1.5 GPM
11	200-009JKNF	CLIP, RETAIN			