Repair Parts

786-TWG2BVBE3MAB

Deck-mounted manual sink faucet with 8" centers

CHICAGO FAUCETS
a Geberit company

Quaturn™ compression operating cartridge

377-XTLHJKABNF

377-XTRHJKABNF

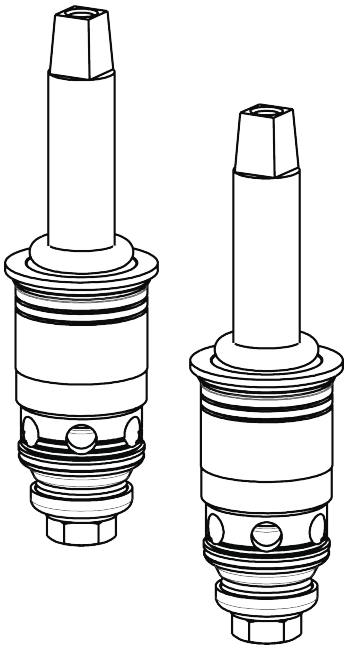

6" rigid/swing gooseneck spout with atmospheric vacuum breaker

GN2BVBJKABCP

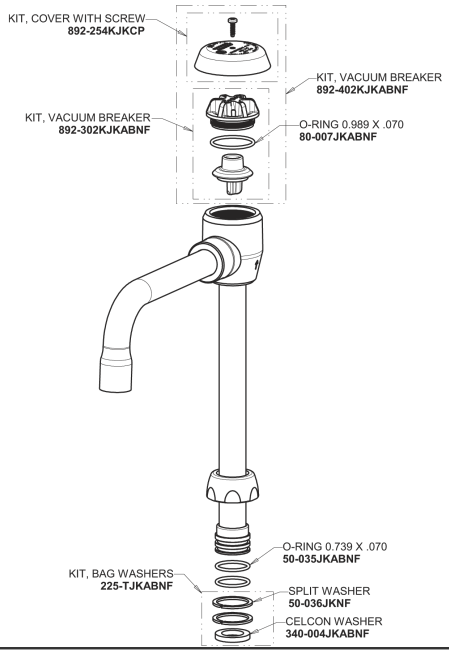

For Technical Assistance:

Phone: 800-TEC-TRUE (832-8783)

Email: techsupport.us@chicagofaucets.com

2100 South Clearwater Drive
Des Plaines, IL 60018
Phone: 847-803-5000
chicagofaucets.com

Repair Parts

786-TWG2BVBE3MAB

Deck-mounted manual sink faucet with 8" centers

CHICAGO FAUCETS
a Geberit company

Pressure compensating Softflo aerator with adapter

E3-2JKABCP

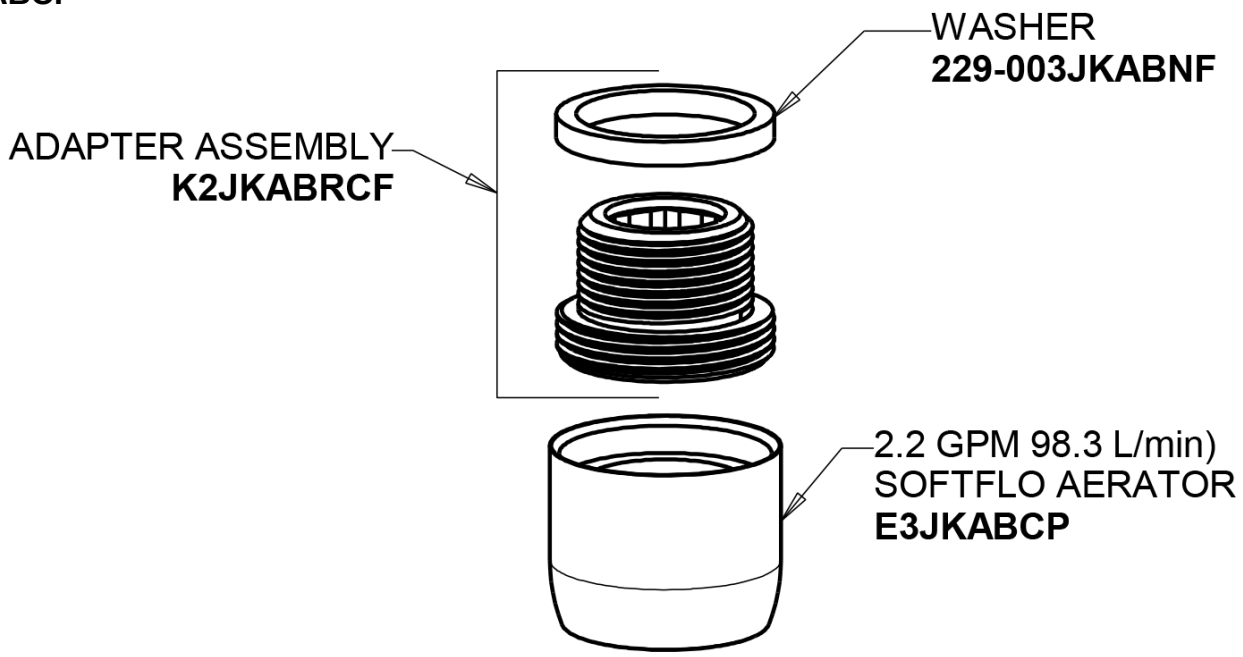

4" wristblade handle

317-PRJKCP

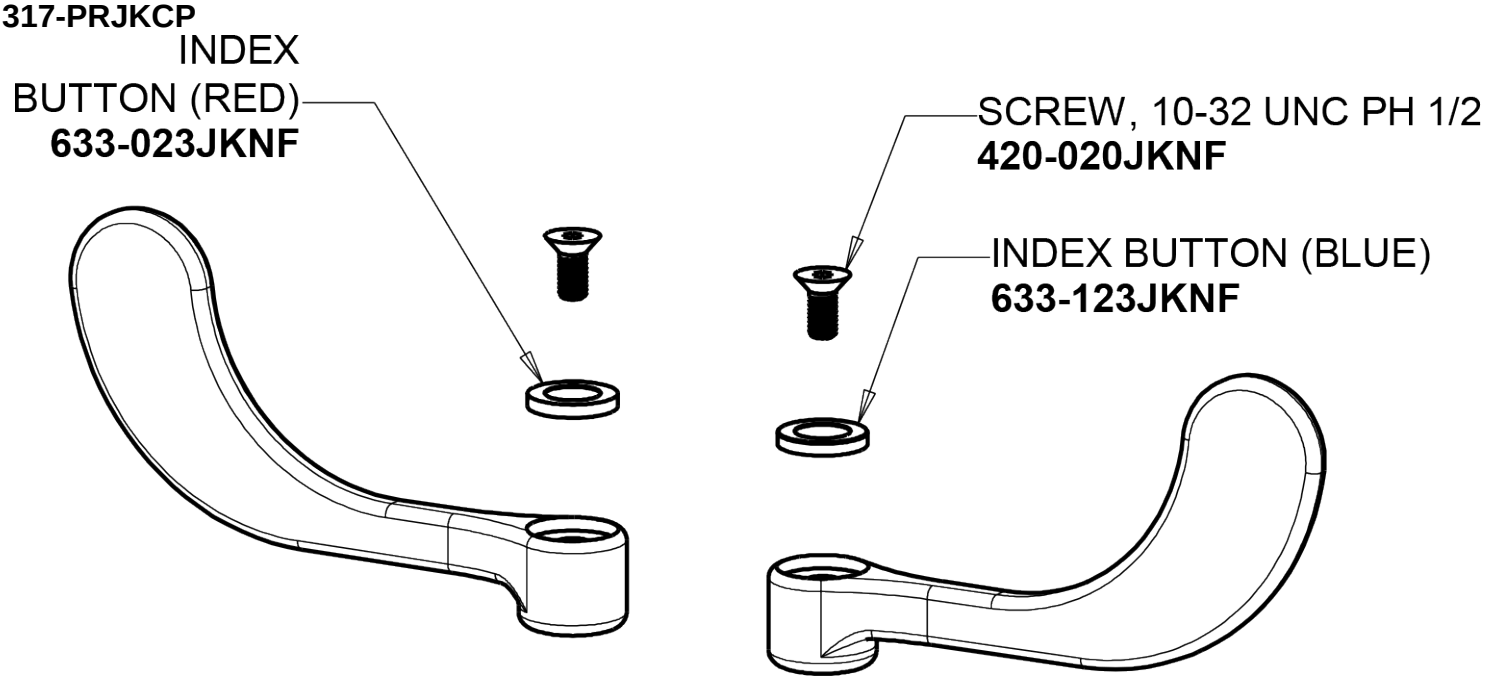

For Technical Assistance:

Phone: 800-TEC-TRUE (832-8783)

Email: techsupport.us@chicagofaucets.com

2100 South Clearwater Drive
Des Plaines, IL 60018
Phone: 847-803-5000
chicagofaucets.com