Repair Parts

786-L9E73ABCP

Deck-mounted manual sink faucet with 8" centers

CHICAGO FAUCETS

a Geberit company

Quaturn™ compression operating cartridge

377-XTLHJKABNF

377-XTRHJKABNF

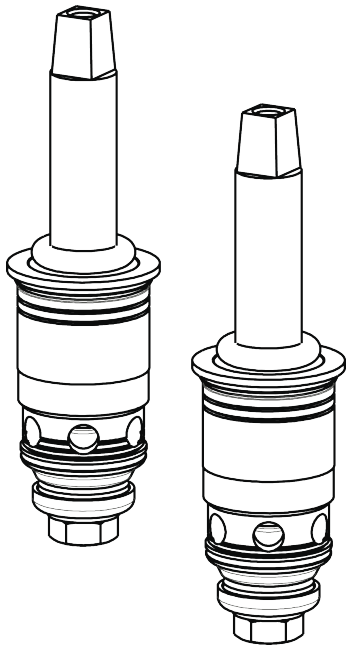

Pressure compensating non-aerating laminar outlet

E73JKABCP

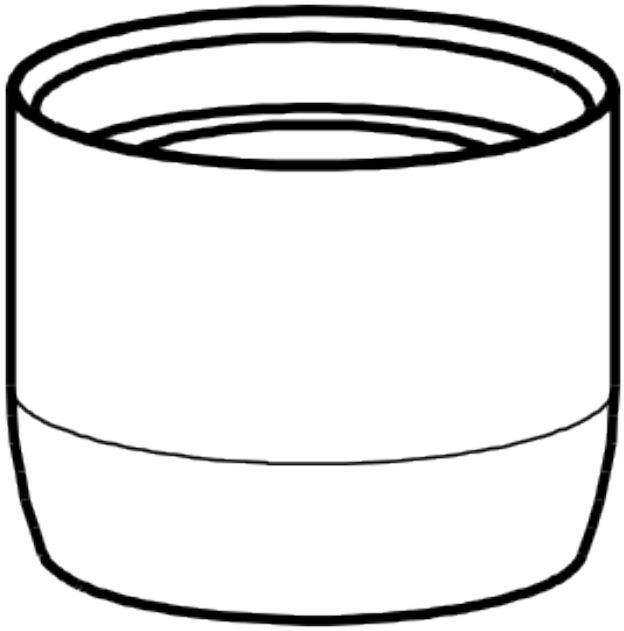

For Technical Assistance:

Phone: 800-TEC-TRUE (832-8783)

Email: techsupport.us@chicagofaucets.com

2100 South Clearwater Drive
Des Plaines, IL 60018
Phone: 847-803-5000
chicagofaucets.com

Repair Parts

786-L9E73ABCP

Deck-mounted manual sink faucet with 8" centers

4" wristblade handle

317-PRJKCP

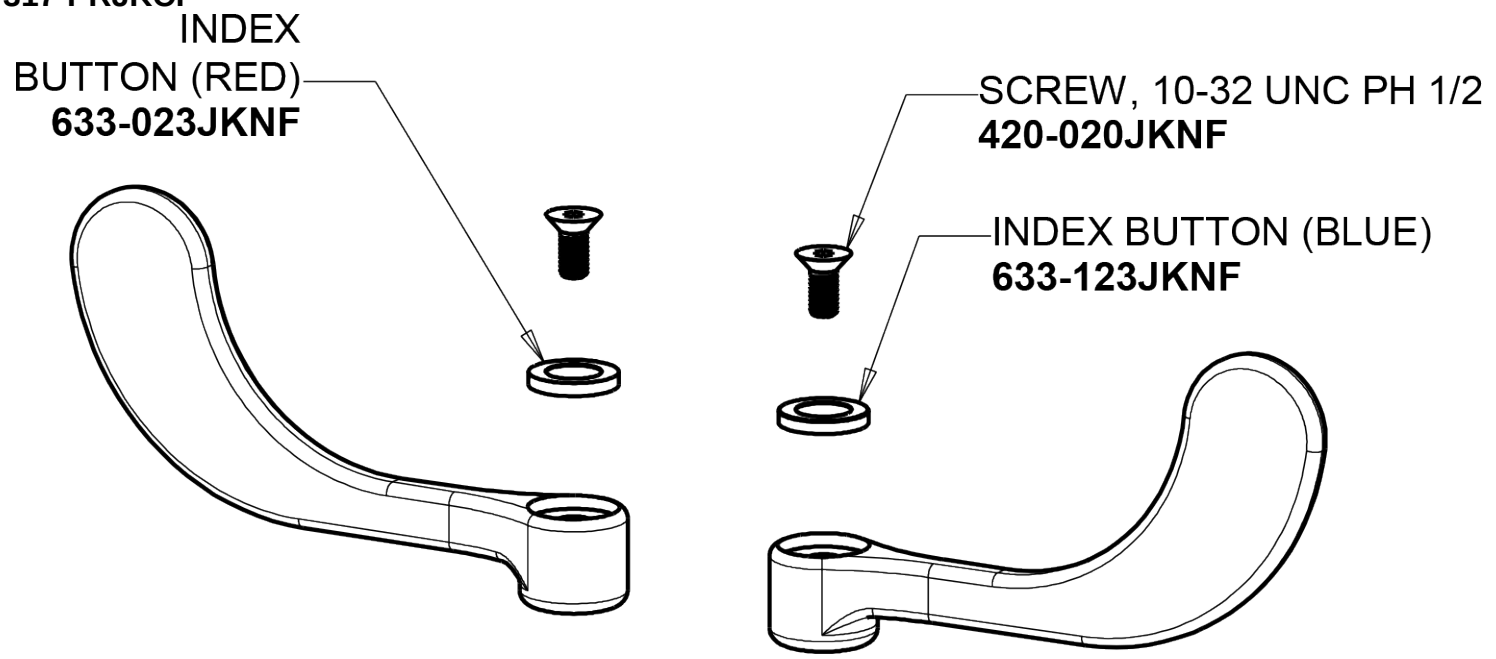

For Technical Assistance:

Phone: 800-TEC-TRUE (832-8783)

Email: techsupport.us@chicagofaucets.com

2100 South Clearwater Drive

Des Plaines, IL 60018

Phone: 847-803-5000

chicagofaucets.com