Repair Parts

540-LDL8E1ABCP

Wall-mounted manual sink faucet with adjustable centers

CHICAGO FAUCETS
a Geberit company

Quaturn™ compression operating cartridge

1-099XTJKABNF

1-100XTJKABNF

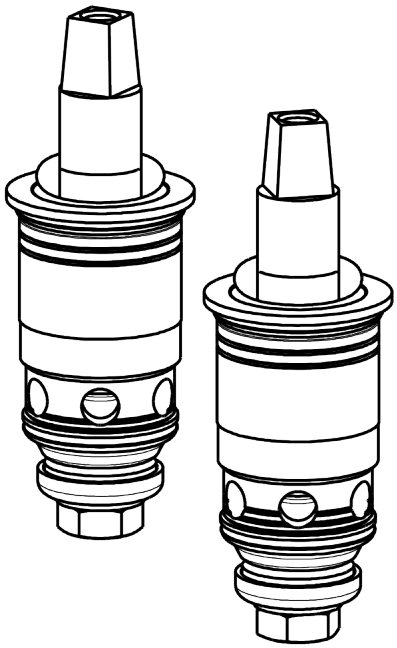

8" L-type swing spout

L8JKABCP

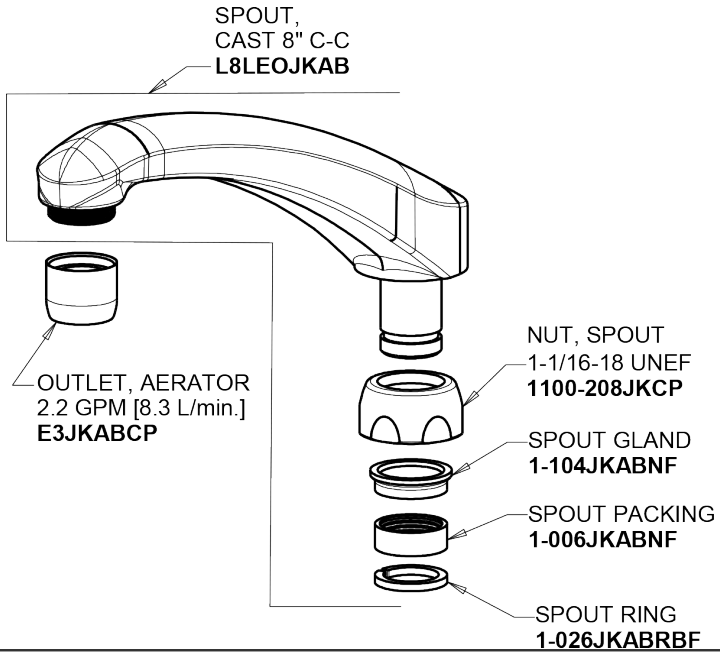

For Technical Assistance:

Phone: 800-TEC-TRUE (832-8783)

Email: techsupport.us@chicagofaucets.com

2100 South Clearwater Drive
Des Plaines, IL 60018
Phone: 847-803-5000
chicagofaucets.com

Repair Parts

540-LDL8E1ABCP

Wall-mounted manual sink faucet with adjustable centers

CHICAGO FAUCETS
a Geberit company

Quixtop outlet with single screen design
E1JKABRCF

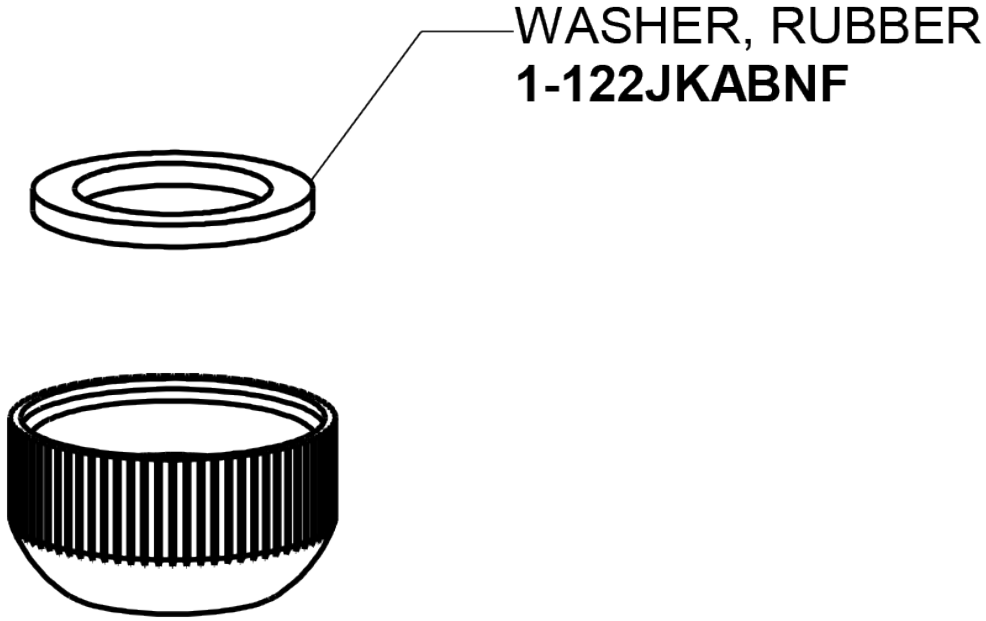

2-3/8" lever handle
369-PRJKCP

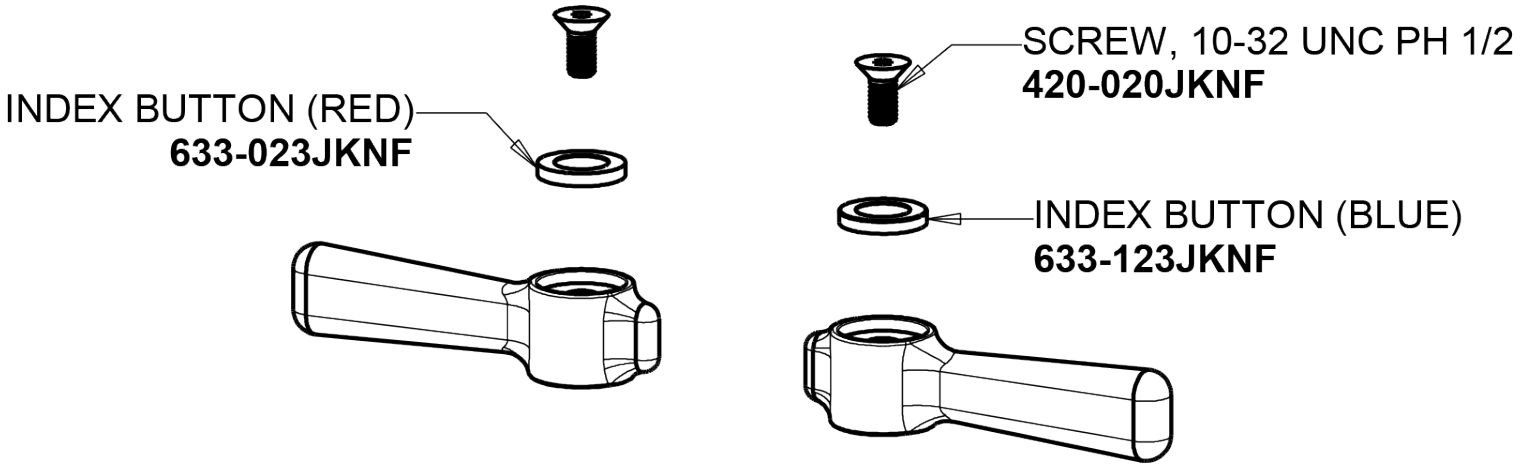

For Technical Assistance:
Phone: 800-TEC-TRUE (832-8783)
Email: techsupport.us@chicagofaucets.com

2100 South Clearwater Drive
Des Plaines, IL 60018
Phone: 847-803-5000
chicagofaucets.com