Repair Parts

540-LDL12VPAABCP

Wall-mounted manual sink faucet with adjustable centers

CHICAGO FAUCETS
a Geberit company

Quaturn™ compression operating cartridge

1-099XTJKABNF

1-100XTJKABNF

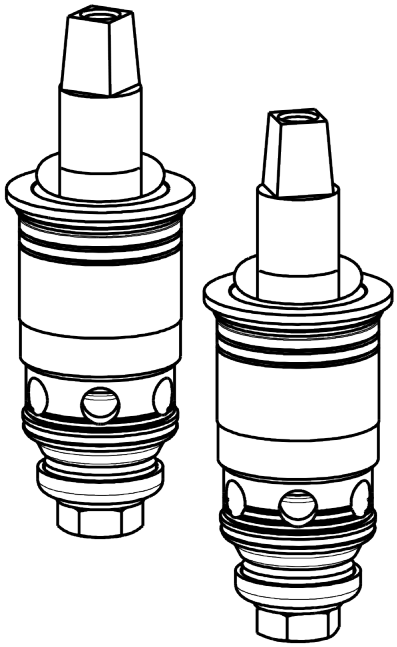

12" L-type swing spout

L12JKABCP

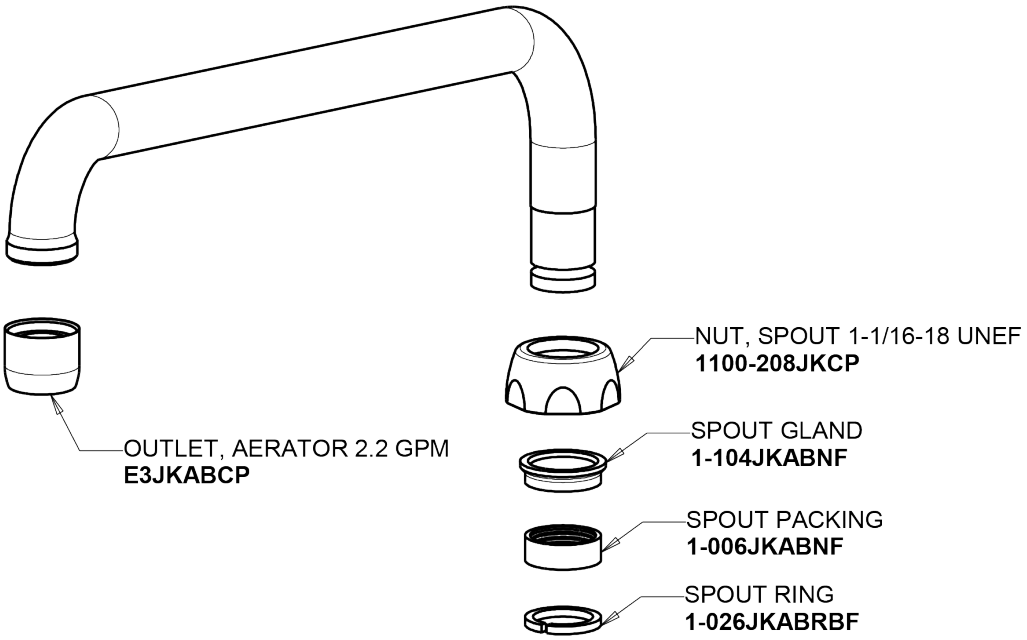

For Technical Assistance:

Phone: 800-TEC-TRUE (832-8783)

Email: techsupport.us@chicagofaucets.com

2100 South Clearwater Drive
Des Plaines, IL 60018
Phone: 847-803-5000
chicagofaucets.com

Repair Parts

540-LDL12VPAABCP

Wall-mounted manual sink faucet with adjustable centers

CHICAGO FAUCETS
a Geberit company

Pressure compensating Softflo aerator
E3VPJKABCP

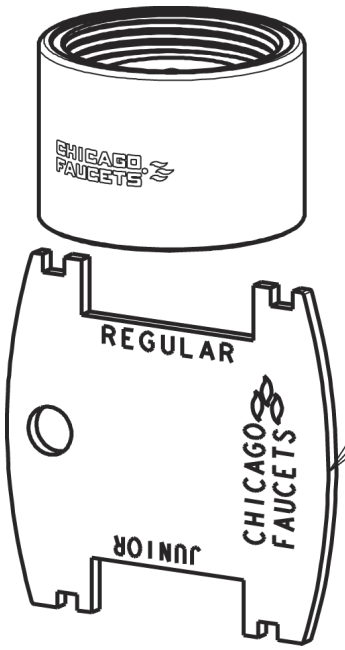

KEY, VANDAL PROOF
3-024JKRCF

2-3/8" lever handle
369-PRJKCP

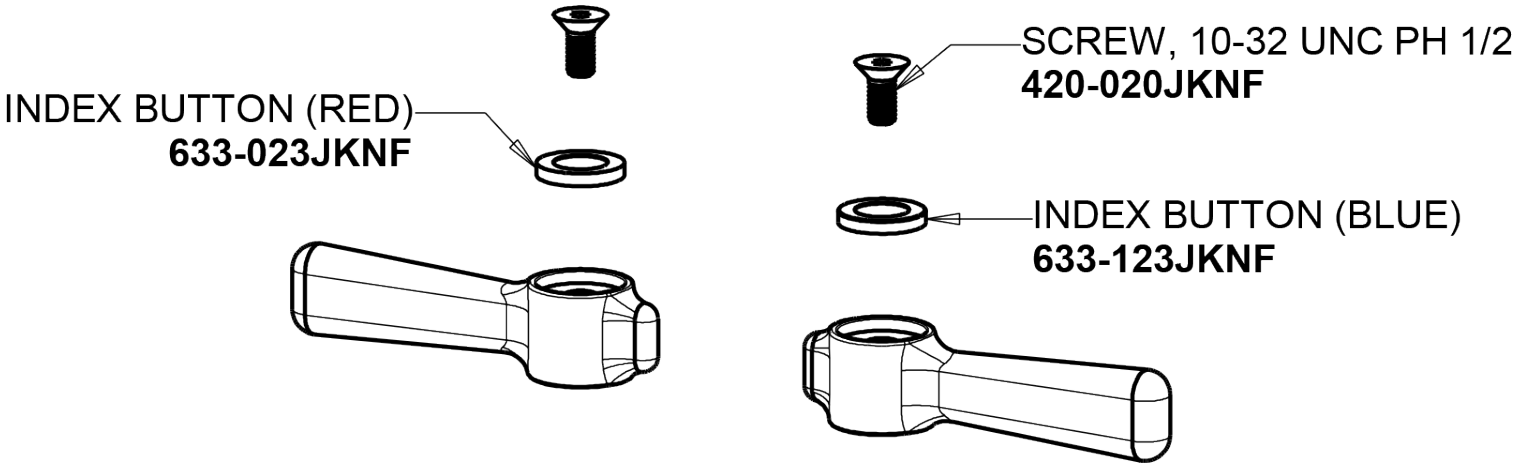

INDEX BUTTON (RED)
633-023JKNF

SCREW, 10-32 UNC PH 1/2
420-020JKNF

INDEX BUTTON (BLUE)
633-123JKNF

For Technical Assistance:

Phone: 800-TEC-TRUE (832-8783)
Email: techsupport.us@chicagofaucets.com

2100 South Clearwater Drive
Des Plaines, IL 60018
Phone: 847-803-5000
chicagofaucets.com