Repair Parts

404-12CCABCP

Deck-mounted manual sink faucet with adjustable centers

CHICAGO FAUCETS
a Geberit company

Quaturn™ compression operating cartridge

377-XTLHJKABNF

377-XTRHJKABNF

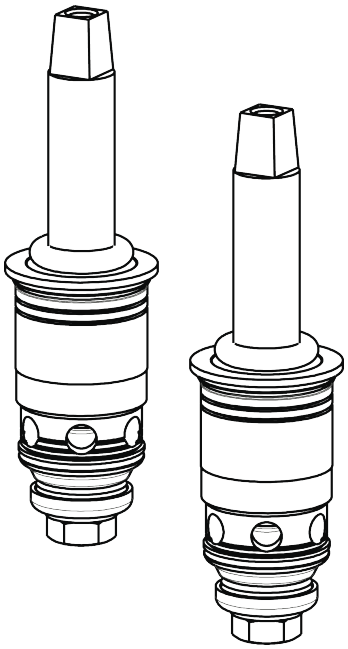

2" canopy single-wing handle

1000-PRJKCP

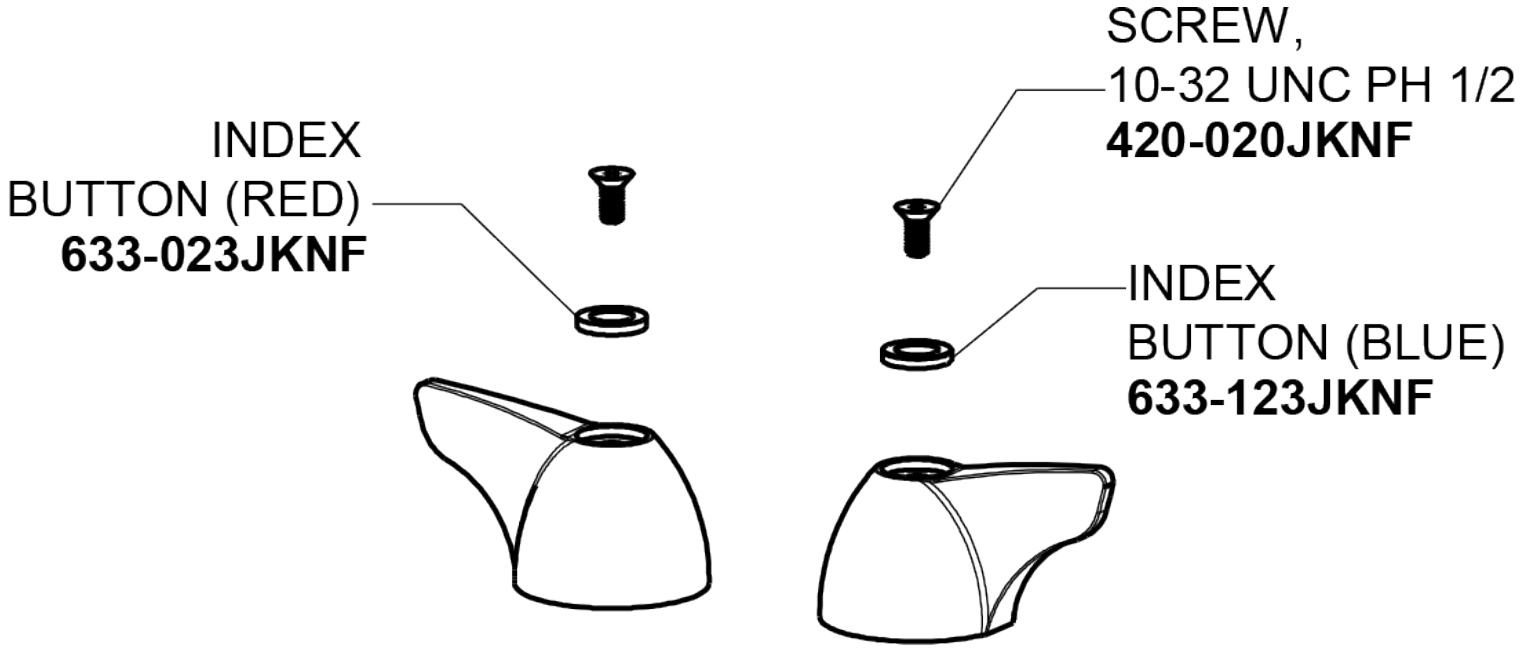

For Technical Assistance:

Phone: 800-TEC-TRUE (832-8783)

Email: techsupport.us@chicagofaucets.com

2100 South Clearwater Drive
Des Plaines, IL 60018
Phone: 847-803-5000
chicagofaucets.com