CHICAGO FAUCETS®
Geberit Group

Faucets and Fittings

Performance you can count on.

The Preferred Choice For Commercial Faucets

Every building has its own unique requirements. Every new project presents a new set of challenges.

There's a reason you can find Chicago Faucets in commercial and institutional facilities across the country – we provide innovative solutions for commercial projects.

Our faucets and fittings are true commercial-grade and extensively tested. Once they're installed, you can be sure that they'll work reliably and keep on working, preventing lost time and lost profits caused by costly call-backs.

CHICAGO FAUCETS®
Geberit Group

Touchless Faucets

HyTronic® Series				
Page 10 - 11	Page 10 - 11	Page 12 - 13	Page 12 - 13	Page 14 -17

HyTronic® Patient Care		ELR Series	EQ Series	
Page 18 - 19	Page 18 - 19	Page 20 - 21	Page 22 - 23	Page 24 - 25

EVR Series	E-Tronic® Series			Alpina® Series
Page 26 - 27	Page 28 - 29	Page 30 - 31	Page 30 - 31	Page 32

Deck-Mounted Single-Handle Metering Sink Faucets

333 Series	701 Series	807/844/857 Series	3400 Series	3500 Series
Page 34	Page 35	Page 36	Page 37	Page 38 - 39

3600 Series
Page 40

Deck-Mounted Two-Handle Metering Sink Faucets

404 Series	405 Series	786 Series	802 Series	895 Series
Page 42 - 43	Page 42 - 43	Page 44	Page 45	Page 46

Deck-Mounted Single-Handle Manual Sink Faucets

349/350 Series	410 Series	420 Series	430 Series	434 Series
Page 48 - 49	Page 50 - 51	Page 52 - 53	Page 54	Page 55

700/730 Series	2200 Series	2300 Series	2302 Series	3510 Series
Page 56	Page 57	Page 58	Page 59	Page 60

Deck-Mounted Two-Handle Manual Sink Faucets

50/51 Series	200 Series	201 Series	404 Series	405 Series
Page 62 - 63	Page 64 - 65	Page 66 - 67	Page 68 - 69	Page 68 - 69

526/891/895/1895	527/1100/1102	786 Series	802 Series
Page 70 - 71	Page 72 - 73	Page 74 - 75	Page 76

Wall-Mounted Service Sink Faucets

305/886 Series	445 Series	540 Series	814/815 Series	835 Series
Page 78	Page 79	Page 80	Page 81	Page 82

897 Series	911 Series
Page 83	Page 84

Wall-Mounted Two-Handle Manual Sink Faucets

225 Series	305 Series	445 Series	521 Series	540/631 Series
Page 86	Page 87	Page 88 - 89	Page 90 - 91	Page 92 - 93

640 Series	737 Series
Page 94 - 95	Page 96

Remote Valves and Spouts

625/628 Series	806/834 Series	745 Series	770/1771 Series	626/629 Series
Page 98	Page 99	Page 100	Page 101	Page 102

Food Service

W4D/W8D Series	W4W/W8W Series	510 Series	523 Series	924 Series
Page 104	Page 105	Page 106	Page 107	Page 108

613 Series	312/324/712 Series	332/334/515 Series	1366/1367 Series
Page 109	Page 110	Page 111	Page 112

CHICAGO FAUCETS.
Geberit Group

Tub/Shower

SH-PB1 Series	449 Series	752 Series	1920 Series	Hand Sprays
	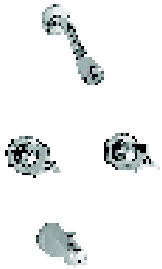			
Page 114	Page 115	Page 116	Page 117	Page 117

Build Your Own	2500 Series
Page 118 - 119	Page 120

Safety and Infection Protection

Combination Emergency Eyewash and Gooseneck Faucets		Cross-Flow Prevention	Mixing Valves
Page 122 - 123	Page 124 - 125	Page 126	Page 127 - 128

Stops & Urinals

Stops	Urinal Valves
Page 130 - 131	Page 132

Components

Spouts	Outlets	Handles	Cartridges	Supply Arms
Page 134 - 135	Page 136	Page 137	Page 138	Page 139

CHICAGO FAUCETS.
Geberit Group

CHICAGO FAUCETS®
Geberit Group

Touchless Faucets

Why Chicago Faucets is **The Right Choice** for Your Touchless Faucets.

Our primary business is and always will be commercial faucets. This focus, combined with our commitment to quality, has made us experts on commercial applications and the number one choice of professionals for over a century. With Chicago Faucets, you can count on the highest quality, innovative features, and unparalleled support.

Look for the symbols below on our products and at chicagofaucets.com. They ensure you're getting the right faucets and fittings for your building.

ECAST **Lead-Free** brass construction

Durable and safe: one quarter of one percent (0.25%) or less total lead content by weighted average.

TempShield® **Scald Protection** built-in

Meet code, reduce installation time with products featuring integrated ASSE 1070 compliant scald protection.

CF NOW! **Quick Ship** program

We're ready when you are with 3-day shipment on many products plus 24-hour and same day shipment availability.*

BUY AMERICAN ACT COMPLIANT **American-Made** products

Over 98% of our products are manufactured and assembled in the United States

LTPS

Power that lasts **(and lasts).**

The Long Term Power System (LTPS) is the perfect solution for any commercial application, providing maintenance-free power for more than 15 years under normal use.

SSPS

A **Maintenance-free** and **Energy Efficient** power option.

The Self-sustaining Power System (SSPS) uses the simple flow of water to create and store power. Simply install below deck on the water supply line. There's no need to replace batteries or wire the faucet to the building's power supply.

EBPS

A **Safeguard** against power outages.

The Emergency Backup Power System (EBPS) is an integrated backup power system available on select HyTronic and E-Tronic 40 AC-powered faucets.

HyTronic® Series

The Number One Choice for touchless faucets.

Our HyTronic® Series touchless faucets set the standard for reliability and user comfort in commercial buildings everywhere. When nothing but the best will do, choose HyTronic.

HyTronic® Patient Care

A New Option for patient care applications.

We've created a line of HyTronic® touchless faucets specifically for patient care applications, giving patients added protection against healthcare-acquired infections.

*Eligible to ship within 24 hours after order acknowledgment and same day if order received by 12:00 pm CST. Customer pays freight.

ELR Series

Touchless **Ligature Resistant** faucets.

The ELR combines the added safety of ligature resistance and touch-free operation with the durability of a heavy-duty, one-piece cast brass body.

EQ Series

Meet the Next Generation of touchless faucets.

We took what we know about building the highest quality commercial faucets in the world and combined it with advanced electronics. Introducing EQ, the next generation of electronic faucets: easy to install, easy to operate, and easy to maintain.

EVR Series

Hard Working overachiever.

The EVR Series combines the added safety and convenience of touchless operation with the durability of a heavy-duty, one-piece cast brass body.

E-Tronic® 40

Touchless Convenience combined with Chicago Faucets durability.

The E-Tronic® 40 is a great option for your restroom with advanced technology for dependability, convenience, and water savings.

E-Tronic® 80

Contemporary design with **Dependable** touchless convenience.

The E-Tronic® 80 is a new, contemporary design option for restroom applications, featuring above-deck electronics and models with integrated scald protection.

Alpina® Series

Touchless and **Timeless** Faucets.

The slim, timeless, and elegant form combined with durable, solid brass construction makes Alpina® ideal for public buildings such as airports, retail, offices, or restaurants.

CHICAGO FAUCETS.
Geberit Group

HyTronic® touchless faucets

- Choice of: AC, DC, AC with Emergency Backup Power Supply (EBPS), Long Term Power Supply (LTPS) or Self-Sustaining Power Supply (SSPS)
- Optional Commander™ handheld unit to maintain and monitor faucet

Contemporary Spout

	Power Source					Mixer			Flow Rate	
	AC	DC	EBPS	LTPS	SSPS	None	Concealed	User Adjustable	0.35 GPM	0.5 GPM
116.102.AB.1	■	—	—	—	—	■	—	—	—	■
116.102.AB.4	■	—	—	—	—	■	—	—	■	—
116.112.AB.1	■	—	—	—	—	—	■	—	—	■
116.112.AB.4	■	—	—	—	—	—	■	—	■	—
116.122.AB.1	■	—	—	—	—	—	—	■	—	■
116.122.AB.4	■	—	—	—	—	—	—	■	■	—
116.202.AB.1	—	■	—	—	—	■	—	—	—	■
116.202.AB.4	—	■	—	—	—	■	—	—	■	—
116.212.AB.1	—	■	—	—	—	—	■	—	—	■
116.212.AB.4	—	■	—	—	—	—	■	—	■	—
116.222.AB.1	—	■	—	—	—	—	—	■	—	■
116.222.AB.4	—	■	—	—	—	—	—	■	■	—
116.599.AB.1*	—	—	—	■	—	■	—	—	—	■
116.645.AB.1*	—	—	—	■	—	—	■	—	—	■
116.649.AB.1*	—	—	—	■	—	—	—	■	—	■
116.664.AB.1	—	—	■	—	—	■	—	—	■	—
116.665.AB.1	—	—	■	—	—	—	■	—	■	—
116.666.AB.1	—	—	■	—	—	—	—	■	■	—
116.952.AB.1	—	—	—	—	■	■	—	—	—	■

Traditional Spout

	Power Source					Mixer			Flow Rate	
	AC	DC	EBPS	LTPS	SSPS	None	Concealed	User Adjustable	0.35 GPM	0.5 GPM
116.101.AB.1	■	—	—	—	—	■	—	—	—	■
116.111.AB.1	■	—	—	—	—	—	■	—	—	■
116.111.AB.4	■	—	—	—	—	—	■	—	■	—
116.121.AB.1	■	—	—	—	—	—	—	■	—	■
116.121.AB.4	■	—	—	—	—	—	—	■	■	—
116.201.AB.1	—	■	—	—	—	■	—	—	—	■
116.201.AB.4	—	■	—	—	—	■	—	—	■	—
116.211.AB.1	—	■	—	—	—	—	■	—	—	■
116.211.AB.4	—	■	—	—	—	—	■	—	■	—
116.221.AB.1	—	■	—	—	—	—	—	■	—	■
116.221.AB.4	—	■	—	—	—	—	—	■	■	—
116.598.AB.1*	—	—	—	■	—	■	—	—	—	■
116.644.AB.1*	—	—	—	■	—	—	■	—	—	■
116.648.AB.1*	—	—	—	■	—	—	—	■	—	■
116.648.AB.4*	—	—	—	■	—	—	—	■	■	—
116.951.AB.1	—	—	—	—	■	■	—	—	—	■
116.661.AB.1	—	—	■	—	—	■	—	—	■	—
116.662.AB.1	—	—	■	—	—	—	■	—	■	—
116.663.AB.1	—	—	■	—	—	—	—	■	■	—

*Not available with CF*Now!* shipping

Parts/Components

	Model	Description
1	243.264.21.1	Window
2	242.433.00.1	Electronic Module
3	243.152.AB.1	Solenoid Valve
4	240.753.00.1	Shut-Off Screw
5	243.390.AB.1	Internal Mixer
6	240.746.AB.1	User Adjustable Mixer
7	550-009K	Check Cartridge (1 qty)

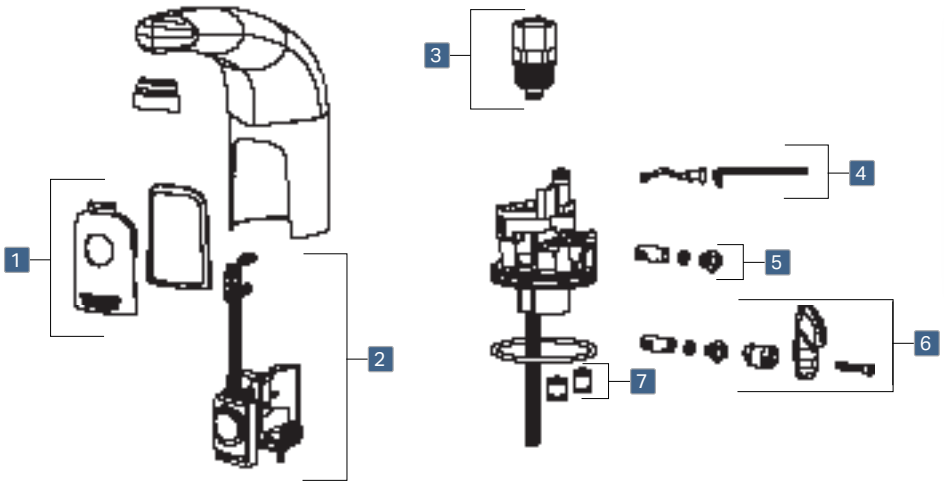

Spouts

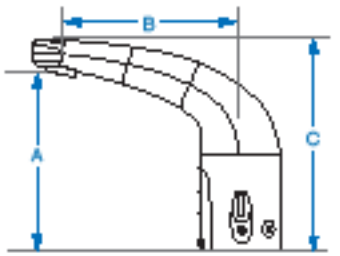

Model	A	B	C	Outlet
240.723.AB.1	5-1/2″	5-1/2″	6-5/8″	Female

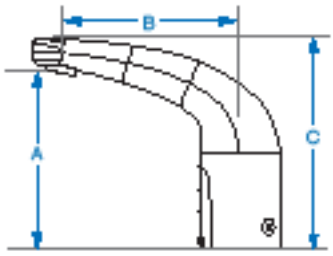

Model	A	B	C	Outlet
240.724.AB.1	5-1/2″	5-1/2″	6-5/8″	Female

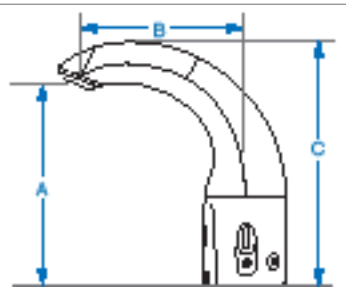

Model	A	B	C	Outlet
240.728.AB.1	5-1/2″	5-1/2″	6-5/8″	Female

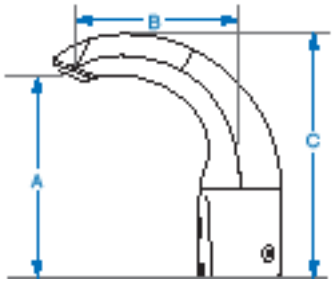

Model	A	B	C	Outlet
240.729.AB.1	6-1/8″	5-1/8″	7-1/2″	Female

Outlets

Model	Thread	GPM
Non-Aerated Outlet Spray Vandal Resistant		
E2805	13/16″ - 27 Male	0.5
Non-Aerated Outlet Vandal Resistant		
E39VP	13/16″ - 27 Male	0.35

CHICAGO FAUCETS.
Geberit Group

HyTronic® touchless faucets

- Choice of: AC, DC, AC with Emergency Backup Power Supply (EBPS), Long Term Power Supply (LTPS) or Self-Sustaining Power Supply (SSPS)
- Optional Commander™ handheld unit to maintain and monitor faucet

Curve Spout

	Power Source					Mixer			Flow Rate		
	AC	DC	EBPS	LTPS	SSPS	None	Concealed	User Adjustable	0.35 GPM	0.5 GPM	1.5 GPM
116.759.AB.1*	■	—	—	—	—	■	—	—	—	—	■
116.767.AB.1*	■	—	—	—	—	—	■	—	—	—	■
116.779.AB.1*	■	—	—	—	—	—	—	■	—	—	■
116.857.AB.1*	—	■	—	—	—	■	—	—	—	■	—
116.867.AB.1*	—	■	—	—	—	—	■	—	—	■	—
116.869.AB.1*	—	■	—	—	—	—	■	—	—	—	■
116.857.AB.4	—	■	—	—	—	■	—	—	■	—	—
116.867.AB.4	—	■	—	—	—	—	■	—	■	—	—
116.877.AB.1*	—	■	—	—	—	—	—	■	—	■	—
116.877.AB.4	—	■	—	—	—	—	—	■	■	—	—
116.879.AB.1	—	■	—	—	—	—	—	■	—	—	■
116.667.AB.1	—	—	■	—	—	■	—	—	■	—	—
116.668.AB.1	—	—	■	—	—	—	■	—	■	—	—
116.669.AB.1	—	—	■	—	—	—	—	■	■	—	—
116.672.AB.1	—	—	■	—	—	—	—	■	—	—	■
116.709.AB.1*	—	—	—	■	—	■	—	—	—	—	■
116.711.AB.1*†	—	—	—	■	—	■	—	—	—	—	■
116.937.AB.1*	—	—	—	—	■	—	■	—	—	—	■
116.939.AB.1*†	—	—	—	—	■	—	■	—	—	—	■

Edge Spout

	Power Source					Mixer			Flow Rate		
	AC	DC	EBPS	LTPS	SSPS	None	Concealed	User Adjustable	0.35 GPM	0.5 GPM	1.5 GPM
116.758.AB.1*	■	—	—	—	—	■	—	—	—	■	—
116.768.AB.1*	■	—	—	—	—	—	■	—	—	■	—
116.778.AB.1*	■	—	—	—	—	—	—	■	—	■	—
116.858.AB.1*	—	■	—	—	—	■	—	—	—	■	—
116.858.AB.4*	—	■	—	—	—	■	—	—	■	—	—
116.860.AB.4	—	■	—	—	—	—	■	—	■	—	—
116.868.AB.1*	—	■	—	—	—	—	■	—	—	■	—
116.870.AB.1†	—	■	—	—	—	—	—	■	—	—	■
116.870.AB.4†	—	■	—	—	—	—	—	■	■	—	—
116.878.AB.1*	—	■	—	—	—	—	—	■	—	■	—
116.673.AB.1	—	—	■	—	—	■	—	—	■	—	—
116.674.AB.1	—	—	■	—	—	—	■	—	■	—	—
116.675.AB.1	—	—	■	—	—	—	—	■	■	—	—
116.710.AB.1*	—	—	—	■	—	■	—	—	—	■	—
116.712.AB.1*†	—	—	—	■	—	—	■	—	—	—	■
116.716.AB.1*†	—	—	—	■	—	—	—	■	—	—	■
116.938.AB.1*	—	—	—	—	■	—	■	—	—	—	■

*Not available with CF*Now!* shipping
†Laminar control insert in spout inlet

Parts/Components

	Model	Description
1	243.264.21.1	Window
2	242.433.00.1	Electronic Module
3	243.152.AB.1	Solenoid Valve
4	240.753.00.1	Shut-Off Screw
5	243.390.AB.1	Internal Mixer
6	240.746.AB.1	User Adjustable Mixer
7	550-009K	Check Cartridge (1 qty)

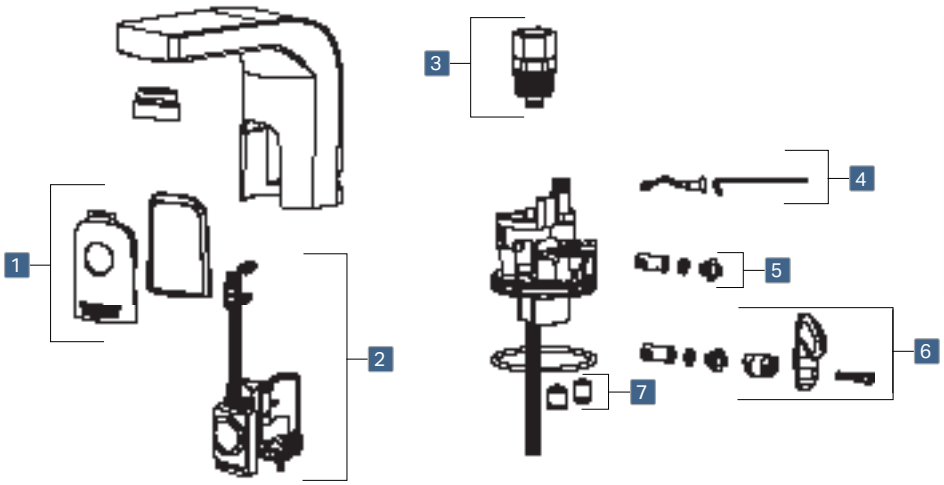

Spouts

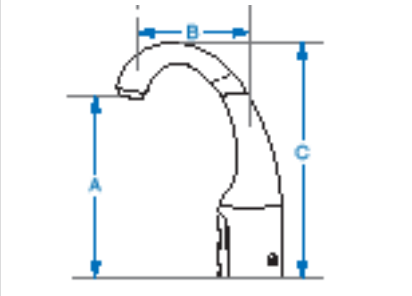

Model	A	B	C	Outlet
242.755.AB.1	7-1/4″	4-7/8″	9-1/2″	Female

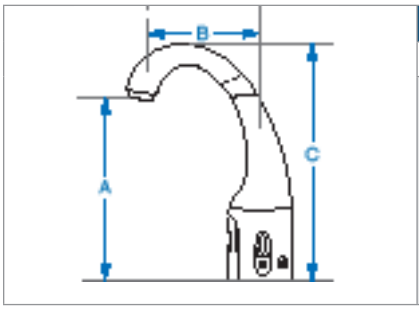

Model	A	B	C	Outlet
242.798.AB.1	7-1/4″	4-7/8″	9-1/2″	Female

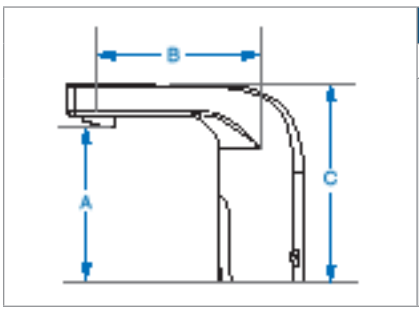

Model	A	B	C	Outlet
242.754.AB.1	4-1/2″	4-3/4″	5-3/4″	Female

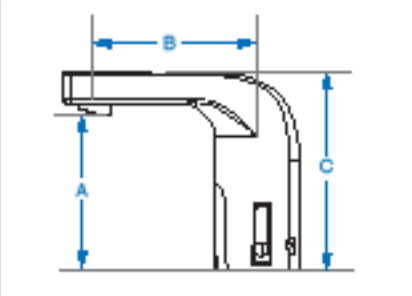

Model	A	B	C	Outlet
242.797.AB.1	4-1/2″	4-3/4″	5-3/4″	Female

Outlets

Model	Thread	GPM
User Adjustable Outlet Spray Vandal Resistant		
E2805	13/16″ - 27 Male	0.5
Non-Aerated Outlet Vandal Resistant		
E39VP	13/16″ - 27 Male	0.35

CHICAGO FAUCETS.
Geberit Group

HyTronic® touchless faucets

- Choice of: AC, DC, AC with Emergency Backup Power Supply (EBPS), Long Term Power Supply (LTPS) or Self-Sustaining Power Supply (SSPS)
- Optional Commander™ handheld unit to maintain and monitor faucet

Gooseneck Spout, Deck-mounted

	Power Source					Mixer			Flow Rate		
	AC	DC	EBPS	LTPS	SSPS	None	Concealed	User Adjustable	0.35 GPM	0.5 GPM	1.5 GPM
116.103.AB.1	■	—	—	—	—	■	—	—	—	■	—
116.103.AB.4	■	—	—	—	—	■	—	—	■	—	—
116.113.AB.1	■	—	—	—	—	—	■	—	—	■	—
116.113.AB.4	■	—	—	—	—	—	■	—	■	—	—
116.123.AB.1	■	—	—	—	—	—	—	■	—	■	—
116.123.AB.4	■	—	—	—	—	—	—	■	■	—	—
116.203.AB.1	—	■	—	—	—	■	—	—	—	■	—
116.203.AB.4	—	■	—	—	—	■	—	—	■	—	—
116.213.AB.1	—	■	—	—	—	—	■	—	—	■	—
116.213.AB.4	—	■	—	—	—	—	■	—	■	—	—
116.223.AB.1	—	■	—	—	—	—	—	■	—	■	—
116.223.AB.4	—	■	—	—	—	—	—	■	■	—	—
116.430.AB.1†	—	■	—	—	—	■	—	—	—	—	■
116.431.AB.1†	—	■	—	—	—	—	■	—	—	—	■
116.432.AB.1†	—	■	—	—	—	—	—	■	—	—	■
116.679.AB.1	—	—	■	—	—	■	—	—	■	—	—
116.680.AB.1	—	—	■	—	—	—	■	—	■	—	—
116.681.AB.1	—	—	■	—	—	—	—	■	■	—	—
116.618.AB.1	—	—	—	■	—	■	—	—	—	■	—
116.646.AB.1	—	—	—	■	—	—	■	—	—	■	—
116.650.AB.1	—	—	—	■	—	—	—	■	—	■	—
116.659.AB.1	—	—	—	■	—	—	■	—	—	—	■
116.943.AB.1	—	—	—	—	■	—	—	■	—	—	■
116.953.AB.1	—	—	—	—	■	■	—	—	—	■	—
116.955.AB.1	—	—	—	—	■	■	—	—	—	—	■

†Laminar control insert in spout inlet
*Not available with CF*Now!* shipping

Parts/Components

	Model	Description
1	243.264.21.1	Window
2	242.433.00.1	Electronic Module
3	243.152.AB.1	Solenoid Valve
4	240.753.00.1	Shut-Off Screw
5	242.843.AB.1	Internal Mixer
6	240.746.AB.1	User Adjustable Mixer
7	550-009K	Check Cartridge (1 qty)

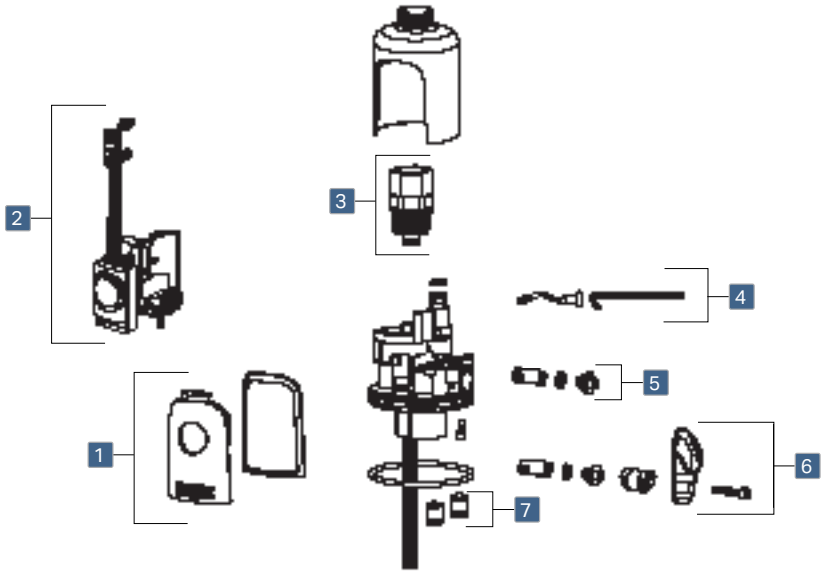

Spouts

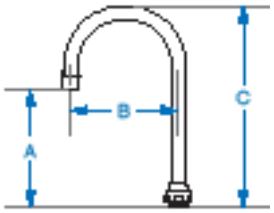

Model	A	B	C	Outlet
Gooseneck Rigid/Swing				
GN2AH8	6-1/8"	5-1/4"	9-3/4"	Male
Gooseneck 1.5 GPM Laminar Insert				
GN2H8FC	6-1/8"	5-1/4"	9-3/4"	Male

Outlets

Model	Thread	GPM
Non-Aerated Outlet Spray Vandal Resistant		
E2805-5	13/16˝ - 27 Male	0.5
Non-Aerated Outlet Vandal Resistant		
E38VP	13/16˝ - 24 UNS Female	0.35

CHICAGO FAUCETS.
Geberit Group

HyTronic® touchless faucets

- Choice of: AC, DC, AC with Emergency Backup Power Supply (EBPS), Long Term Power Supply (LTPS) or Self-Sustaining Power Supply (SSPS)
- Optional Commander™ handheld unit to maintain and monitor faucet

Gooseneck Spout, Wall-mounted

	Power Source					Mixer				Flow Rate	
	AC	DC	EBPS	LTPS	SSPS	None	Concealed	User Adjustable	External Thermostatic	0.35 GPM	0.5 GPM
116.104.AB.1	■	—	—	—	—	■	—	—	—	—	■
116.114.AB.1	■	—	—	—	—	—	■	—	—	—	■
116.124.AB.1	■	—	—	—	—	—	—	■	—	—	■
116.204.AB.1	—	■	—	—	—	■	—	—	—	—	■
116.204.AB.4	—	■	—	—	—	■	—	—	—	■	—
116.214.AB.1	—	■	—	—	—	—	■	—	—	—	■
116.214.AB.4	—	■	—	—	—	—	■	—	—	■	—
116.224.AB.1	—	■	—	—	—	—	—	■	—	—	■
116.224.AB.4	—	■	—	—	—	—	—	■	—	■	—
116.688.AB.1	—	—	■	—	—	■	—	—	—	■	—
116.689.AB.1	—	—	■	—	—	—	■	—	—	■	—
116.690.AB.1	—	—	■	—	—	—	—	■	—	■	—
116.619.AB.1*	—	—	—	■	—	■	—	—	—	—	■
116.647.AB.1*	—	—	—	■	—	—	■	—	—	—	■
116.651.AB.1*	—	—	—	■	—	—	—	■	—	—	■
116.954.AB.1	—	—	—	—	■	■	—	—	—	—	■
116.974.AB.1†	—	—	—	—	■	—	—	—	■	—	■

*Not available with CF*Now!* shipping

Parts/Components

	Model	Description
1	243.264.21.1	Window
2	242.433.00.1	Electronic Module
3	243.152.AB.1	Solenoid Valve
4	240.753.00.1	Shut-Off Screw
5	242.843.AB.1	Internal Mixer
6	240.746.AB.1	User Adjustable Mixer
7	550-009K	Check Cartridge (1 qty)

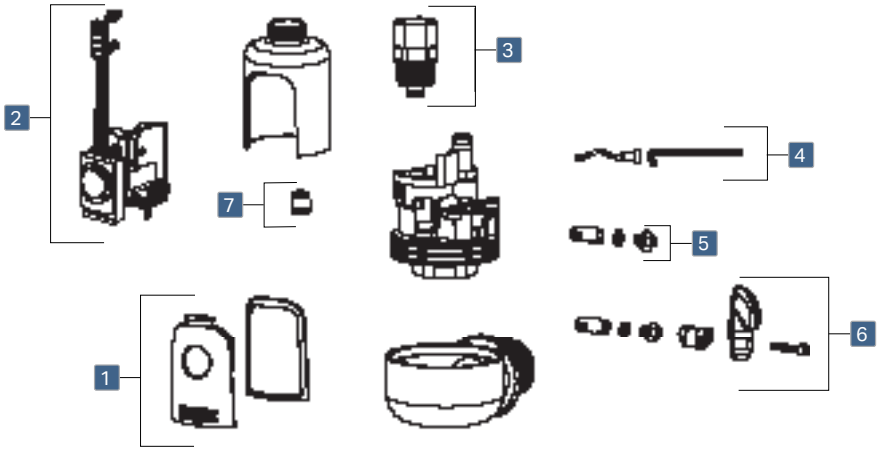

Spouts

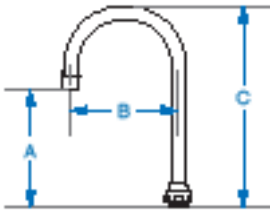

Model	A	B	C	Outlet
Gooseneck Rigid/Swing				
GN2AH8	6-1/8"	5-1/4"	9-3/4"	Male

Outlets

Model	Thread	GPM
Non-Aerated Outlet Spray Vandal Resistant		
E2805-5	13/16˝ - 27 Male	0.5
Non-Aerated Outlet Vandal Resistant		
E38VP	13/16˝ - 24 UNS Female	0.35

CHICAGO FAUCETS.
Geberit Group

HyTronic® Patient Care touchless faucets

A new option for touch-free faucets in patient care applications.

HyTronic Patient Care is a line of faucets designed specifically for patient care applications. HyTronic Patient Care faucets offer touch-free, dual beam design that provides quick response time and the added safety of improved hygiene. Most important of all, they limit the tested microbial contamination to a level statistically similar to standards set by a conventional manual faucet.

Tested and validated by a nationally-recognized testing laboratory

HyTronic Patient Care faucets were extensively tested for heterotrophic plate count (HPC) and Legionella bacteria. We utilized the test facilities at the University of Pittsburgh with culture and sample analysis performed by Special Pathogens Laboratory. SPL, a nationally-recognized analytical microbiology laboratory, specializes in the detection, control, and remediation of waterborne pathogens such as Legionella.

SPL

BUY AMERICAN ACT COMPLIANT ECAST

HyTronic Patient Care Traditional

	Power Source				Mixer			Flow Rate	
	AC	DC	EBPS	LTPS	None	Concealed	User Adjustable	1.5 GPM	2.2 GPM
116.615.AB.1	■	—	—	—	■	—	—	■	—
116.590.AB.1	—	■	—	—	■	—	—	—	■
116.592.AB.1	—	■	—	—	—	—	■	■	—
116.695.AB.1	—	—	—	■	■	—	—	—	■
116.696.AB.1	—	—	—	■	—	—	■	■	—
116.607.AB.1*	—	—	■	—	■	—	—	—	■
116.608.AB.1*	—	—	■	—	—	—	■	■	—

*Available with CF*Now!* shipping

HyTronic Patient Care Gooseneck

	Power Source				Mixer			Flow Rate	
	AC	DC	EBPS	LTPS	None	Concealed	User Adjustable	2.2 GPM	2.5 GPM
116.595.AB.1	■	—	—	—	■	—	—	■	—
116.597.AB.1	■	—	—	—	—	—	■	—	■
116.594.AB.1	—	■	—	—	■	—	—	■	—
116.596.AB.1	—	■	—	—	—	—	■	—	■
116.697.AB.1	—	—	—	■	■	—	—	■	—
116.609.AB.1*	—	—	■	—	■	—	—	■	—
116.610.AB.1*	—	—	■	—	—	—	■	—	■

*Available with CF*Now!* shipping

Parts/Components

	Model	Description
1	243.264.21.1	Window
2	242.433.00.1	Electronic Module
3	240.744.AB.1	Solenoid Valve
4	240.753.00.1	Shut-Off Screw
5	242.843.AB.1	Internal Mixer
6	240.746.AB.1	User Adjustable Mixer

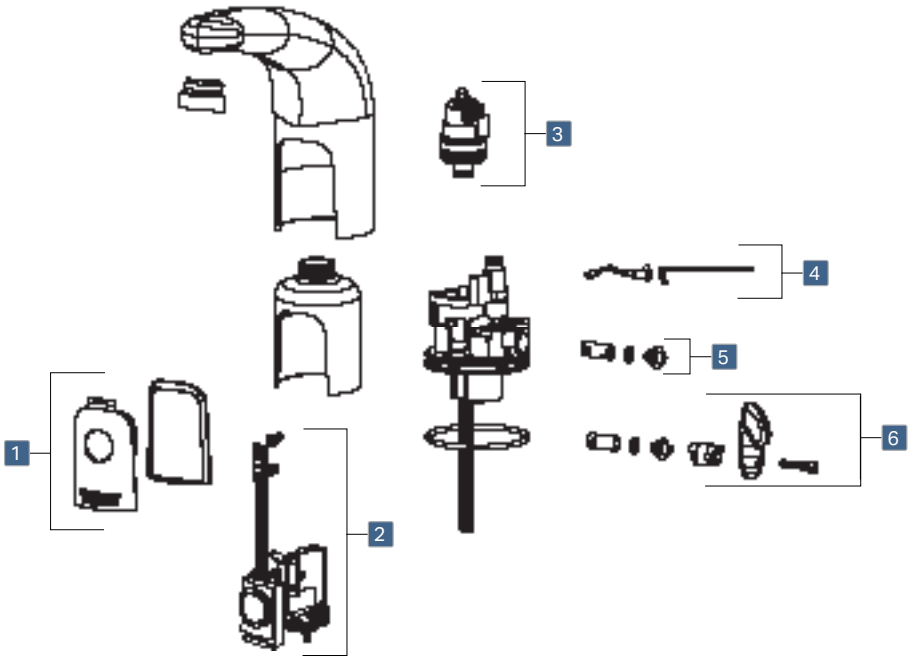

Spouts

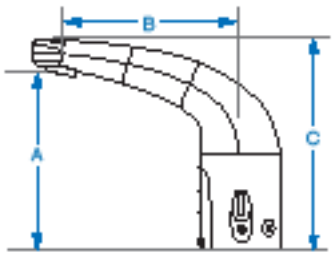

Model	A	B	C	Outlet
240.723.AB.1	5-1/2″	5-1/2″	6-5/8″	Female

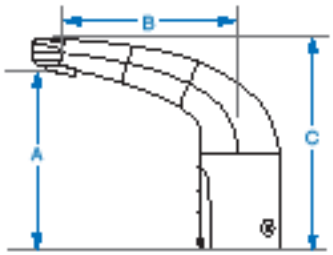

Model	A	B	C	Outlet
240.724.AB.1	5-1/2″	5-1/2″	6-5/8″	Female

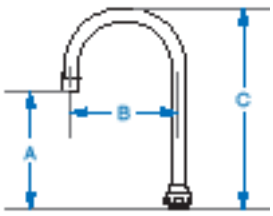

Model	A	B	C	Outlet
Gooseneck Rigid/Swing				
GN2AH8	6-1/8"	5-1/4"	9-3/4"	Male
Gooseneck 1.5 GPM Laminar Insert				
GN2H8FC	6-1/8"	5-1/4"	9-3/4"	Male

Outlets

Model	Thread	GPM
Aerated Vandal Resistant		
E3VP	13/16" - 24 UNS Female	2.2
E12VP	13/16" - 27 UNS Male	2.2
Laminar Vandal Resistant		
E62VP	3/16″ - 27 UNS Male, Antimicrobial	1.5

CHICAGO FAUCETS.
Geberit Group

ELR Series touchless faucets

A new option for behavioral and healthcare applications.

Chicago Faucets has designed products to help reduce ligature hazards, resulting in a safer environment. Chicago Faucets ligature resistant products deliver durable, long lasting, solid brass construction and scald protection to provide a safe, solid solution in high-risk areas.

The ELR combines the added safety of ligature resistance and touch-free operation with the durability of a heavy-duty, one-piece cast brass body. Power options and mixing – including integrated scald protection – are concealed in a secure, compact control box.

- Rounded and sloped design to minimize ligature points
- One-piece cast brass body with recessed vandal resistant outlet
- 4″ centers
- Available with integral ASSE 1070 compliant thermostatic protection
- Optional Commander™ handheld unit to maintain and monitor faucet
- Choice of AC, DC, and Long Term Power Supply (LTPS)
- Polished chrome finish

ELR

	Power Source			Mixer			Flow Rate	
	AC	DC	LTPS	None	Mechanical	Thermostatic	0.5 GPM	1.0 GPM
ELR-E12A-41ABCP	■	—	—	■	—	—	■	—
ELR-E12E-41ABCP	■	—	—	■	—	—	—	■
ELR-E12A-42ABCP	■	—	—	—	■	—	■	—
ELR-E12E-42ABCP	■	—	—	—	■	—	—	■
ELR-E12A-43ABCP	■	—	—	—	—	■	■	—
ELR-E12E-43ABCP	■	—	—	—	—	■	—	■
ELR-E12A-11ABCP	—	■	—	■	—	—	■	—
ELR-E12E-11ABCP	—	■	—	■	—	—	—	■
ELR-E12A-12ABCP	—	■	—	—	■	—	■	—
ELR-E12E-12ABCP	—	■	—	—	■	—	—	■
ELR-E12A-13ABCP	—	■	—	—	—	■	■	—
ELR-E12E-13ABCP	—	■	—	—	—	■	—	■
ELR-E12A-61ABCP	—	—	■	■	—	—	■	—
ELR-E12E-61ABCP	—	—	■	■	—	—	—	■
ELR-E12A-62ABCP	—	—	■	—	■	—	■	—
ELR-E12E-62ABCP	—	—	■	—	■	—	—	■
ELR-E12A-63ABCP	—	—	■	—	—	■	■	—
ELR-E12E-63ABCP	—	—	■	—	—	■	—	■

Parts/Components

	Model	Description
1	ELR-001	Module
2	243.153.00.1	Batteries and Holder
3	243.869.00.1	Long Life Battery
4	243.152.AB.1	Solenoid Valve

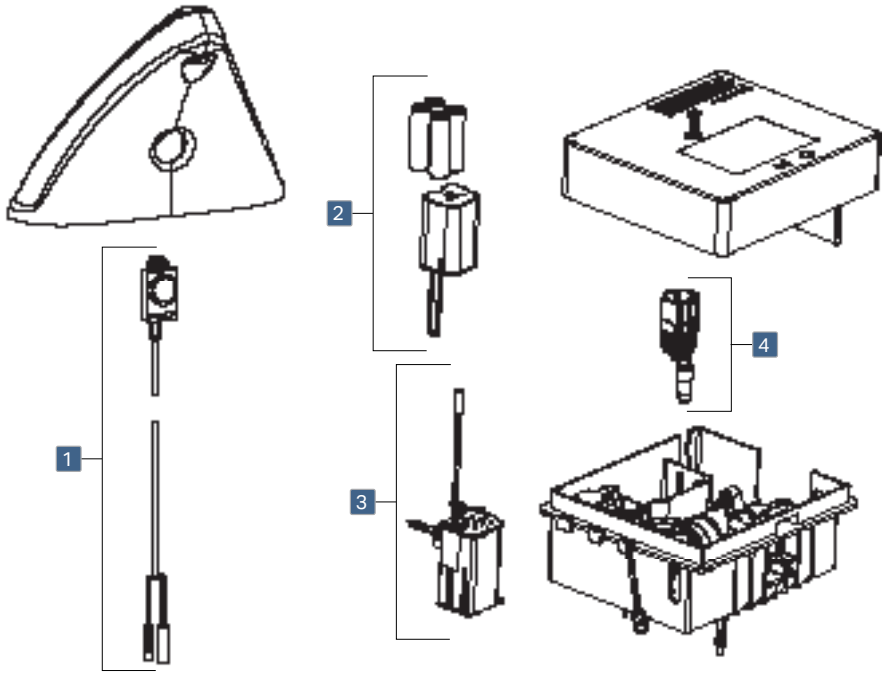

Dimensions

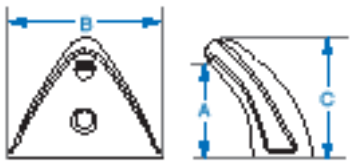

A	B	C	Outlet
3-7/8″	6-1/2″	5″	Female

Outlets

Model	Thread	GPM
243.145.AB.1	Econo-Flo™ non-aerating spray	0.5
244.170.00.1	Laminar flow outlet	1.0

CHICAGO FAUCETS.
Geberit Group

EQ Series touchless faucets

- Choice of: AC, DC, Long Term Power Supply (LTPS), or Self-Sustaining Power Supply (SSPS)
- Available with integral ASSE 1070 compliant thermostatic protection
- Available with built-in Bluetooth® technology to monitor and control with a smartphone or tablet

Curved Spout, Single Hole

	Power Source					Mixer				Flow Rate	
	AC Hard-wire	AC Plug-in	DC	LTPS	SSPS	None	Mechanical Concealed	Thermostatic Concealed	Thermostatic User Adjustable	0.35 GPM	0.5 GPM
EQ-A11A-53ABCP	■	—	—	—	—	—	—	■	—	—	■
EQ-A21A-55ABCP	■	—	—	—	—	—	—	—	■	—	■
EQ-A11A-31ABCP	—	■	—	—	—	■	—	—	—	—	■
EQ-A11C-33ABCP	—	■	—	—	—	—	—	■	—	■	—
EQ-A11A-33ABCP	—	■	—	—	—	—	—	■	—	—	■
EQ-A21A-35ABCP	—	■	—	—	—	—	—	—	■	—	■
EQ-A11C-11ABCP	—	—	■	—	—	■	—	—	—	■	—
EQ-A11A-11ABCP*	—	—	■	—	—	■	—	—	—	—	■
EQ-A11A-12ABCP*	—	—	■	—	—	—	■	—	—	—	■
EQ-A11A-11ABCPT	—	—	■	—	—	■	—	—	—	—	■
EQ-A11A-13ABCP*	—	—	■	—	—	—	—	■	—	—	■
EQ-A21A-15ABCP*	—	—	■	—	—	—	—	—	■	—	■
EQ-A11C-61ABCP	—	—	—	■	—	■	—	—	—	■	—
EQ-A11A-61ABCP	—	—	—	■	—	■	—	—	—	—	■
EQ-A11C-63ABCP	—	—	—	■	—	—	—	■	—	■	—
EQ-A11A-63ABCP	—	—	—	■	—	—	—	■	—	—	■
EQ-A11C-21ABCP*	—	—	—	—	■	■	—	—	—	■	—
EQ-A11C-23ABCP*	—	—	—	—	■	—	—	■	—	■	—
EQ-A21C-25ABCP*	—	—	—	—	■	—	—	—	■	■	—

*Available with CF*Now!* shipping

Curved Spout, Single Hole, Built-In Bluetooth® Technology

	Power Source					Mixer				Flow Rate	
	AC Hard-wire	AC Plug-in	DC	LTPS	SSPS	None	Mechanical Concealed	Thermostatic Concealed	Thermostatic User Adjustable	0.35 GPM	0.5 GPM
EQ-A11A-31ABCPT	—	■	—	—	—	■	—	—	—	—	■
EQ-A11A-33ABCPT	—	■	—	—	—	—	—	■	—	—	■
EQ-A11A-11ABCPT	—	—	■	—	—	■	—	—	—	—	■
EQ-A11A-13ABCPT	—	—	■	—	—	—	—	■	—	—	■

Curved Spout, 4˝ Centers

	Power Source					Mixer				Flow Rate	
	AC Hard-wire	AC Plug-in	DC	LTPS	SSPS	None	Mechanical Concealed	Thermostatic Concealed	Thermostatic User Adjustable	0.35 GPM	0.5 GPM
EQ-A12A-51ABCP	■	—	—	—	—	■	—	—	—	—	■
EQ-A12A-33ABCP	—	■	—	—	—	—	—	■	—	—	■
EQ-A12A-11ABCP*	—	—	■	—	—	■	—	—	—	—	■
EQ-A12A-12ABCP*	—	—	■	—	—	—	■	—	—	—	■
EQ-A12C-13ABCP	—	—	■	—	—	—	—	■	—	■	—
EQ-A12A-13ABCP*	—	—	■	—	—	—	—	■	—	—	■
EQ-A12C-23ABCP*	—	—	—	—	■	—	—	■	—	■	—

*Available with CF*Now!* shipping

Parts/Components

	Model	Description
1	EQ-006	Batteries and Holder
2	242.154.00.1	SSPS Power Cell
3	243.152.AB.1	Solenoid Valve

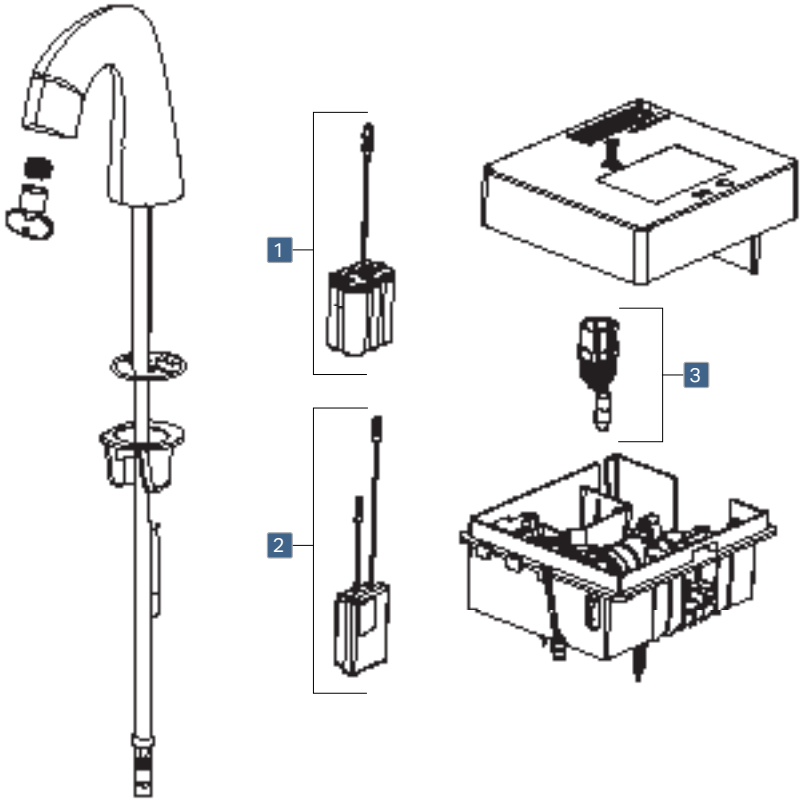

Spouts

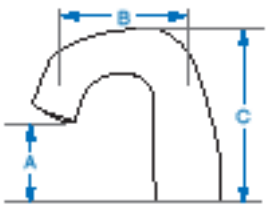

Model	A	B	C	Outlet
EQ-A11B-K	3″	4-1/2″	5-7/8″	Female

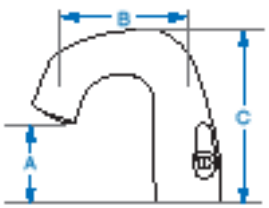

Model	A	B	C	Outlet
EQ-A21A-K	3″	4-1/2″	5-7/8″	Female

Outlets

Model	Thread	GPM
243.145.AB.1	Econo-Flo™ non-aerating spray	0.5
243.146.AB.1	Softflo aerator	1.0
243.706.00.1	Econo-Flo™ non-aerating spray	0.35

CHICAGO FAUCETS.
Geberit Group

EQ Series touchless faucets

- Choice of: AC, DC, Long Term Power Supply (LTPS), or Self-Sustaining Power Supply (SSPS)
- Available with integral ASSE 1070 compliant thermostatic protection

High Arc Spout, Single Hole

	Power Source					Mixer			Flow Rate	
	AC Hard-wire	AC Plug-in	DC	LTPS	SSPS	None	Thermostatic Concealed	Thermostatic User Adjustable	0.35 GPM	0.5 GPM
EQ-C11A-51ABCP	■	—	—	—	—	■	—	—	—	■
EQ-C11A-53ABCP	■	—	—	—	—	—	■	—	—	■
EQ-C11A-33ABCP	—	■	—	—	—	—	■	—	—	■
EQ-C11A-11ABCP	—	—	■	—	—	■	—	—	—	■
EQ-C11A-13ABCP	—	—	■	—	—	—	■	—	—	■
EQ-C21A-15ABCP*	—	—	■	—	—	—	—	■	—	■
EQ-C11A-61ABCP	—	—	—	■	—	■	—	—	—	■
EQ-C11A-63ABCP	—	—	—	■	—	—	■	—	—	■
EQ-C11C-21ABCP	—	—	—	—	■	■	—	—	■	—
EQ-C11A-62ABCP	—	—	—	—	■	—	■	—	—	■
EQ-C11C-23ABCP	—	—	—	—	■	—	■	—	■	—
EQ-C21C-25ABCP*	—	—	—	—	■	—	—	■	■	—

*Available with CF*Now!* shipping

High Arc Spout, Single Hole, Built-In Bluetooth® Technology

	Power Source					Mixer			Flow Rate	
	AC Hard-wire	AC Plug-in	DC	LTPS	SSPS	None	Thermostatic Concealed	Thermostatic User Adjustable	0.35 GPM	0.5 GPM
EQ-A11A-31ABCPT	■	—	—	—	—	■	—	—	—	■
EQ-A11A-33ABCPT	■	—	—	—	—	—	■	—	—	■
EQ-C11A-11ABCPT	—	—	■	—	—	■	—	—	—	■
EQ-C11A-13ABCPT	—	—	■	—	—	—	■	—	—	■

High Arc Spout, 4˝ Centers

	Power Source					Mixer			Flow Rate	
	AC Hard-wire	AC Plug-in	DC	LTPS	SSPS	None	Thermostatic Concealed	Thermostatic User Adjustable	0.35 GPM	0.5 GPM
EQ-C22A-15ABCP*	—	—	■	—	—	—	—	■	—	■

*Available with CF*Now!* shipping

Parts/Components

	Model	Description
1	EQ-006	Batteries and Holder
2	242.154.00.1	SSPS Power Cell
3	243.152.AB.1	Solenoid Valve

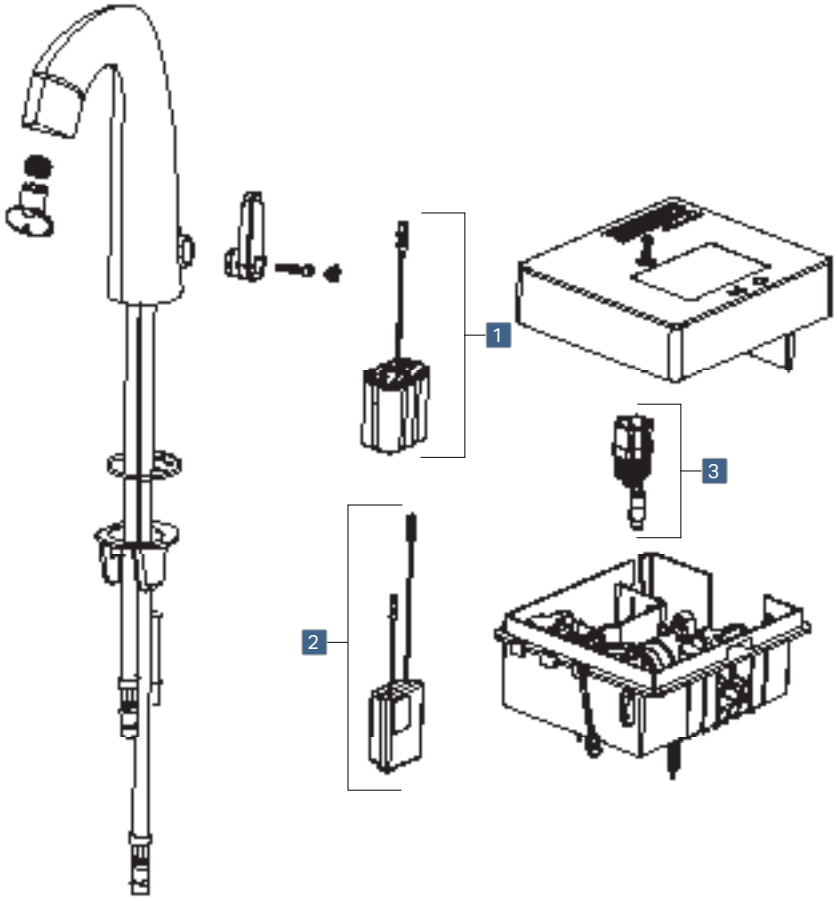

Spouts

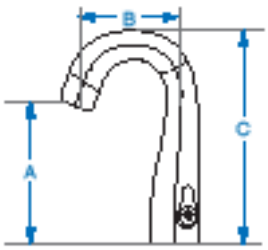

Model	A	B	C	Outlet
EQ-C21A-K	6-1/4″	4-1/2″	9-5/8″	Female

Outlets

Model	Thread	GPM
243.145.AB.1	Econo-Flo™ non-aerating spray	0.5
243.706.00.1	Econo-Flo™ non-aerating spray	0.35

CHICAGO FAUCETS.
Geberit Group

EVR Series touchless faucet

- 4″ centers
- One-piece cast brass body
- Higher and longer spout reach for improved user experience
- Available with integral ASSE 1070 compliant thermostatic protection
- Optional Commander™ handheld unit to maintain and monitor faucet
- Choice of AC, DC, and Long Term Power Supply (LTPS)
- Polished chrome finish

ECAST

	Power Source			Mixer			Flow Rate	
Model	AC	DC	LTPS	None	Mechanical	Thermostatic	0.35 GPM	0.5 GPM
EVR-A12D-41ABCP	■	—	—	■	—	—	■	—
EVR-A12A-41ABCP	■	—	—	■	—	—	—	■
EVR-A12D-42ABCP*	■	—	—	—	■	—	■	—
EVR-A12A-42ABCP*	■	—	—	—	■	—	—	■
EVR-A12D-43ABCP†	■	—	—	—	—	■	■	—
EVR-A12A-43ABCP†	■	—	—	—	—	■	—	■
EVR-A12D-11ABCP	—	■	—	■	—	—	■	—
EVR-A12A-11ABCP	—	■	—	■	—	—	■	—
EVR-A12D-12ABCP*	—	■	—	—	■	—	■	—
EVR-A12A-12ABCP*	—	■	—	—	■	—	—	■
EVR-A12D-13ABCP†	—	■	—	—	—	■	■	—
EVR-A12A-13ABCP†	—	■	—	—	—	■	—	■
EVR-A12D-61ABCP	—	—	■	■	—	—	■	—
EVR-A12A-61ABCP	—	—	■	■	—	—	—	■
EVR-A12D-62ABCP*	—	—	■	—	■	—	■	—
EVR-A12A-62ABCP*	—	—	■	—	■	—	—	■
EVR-A12D-63ABCP†	—	—	■	—	—	■	■	—
EVR-A12A-63ABCP†	—	—	■	—	—	■	—	■

*Mechanical Mixing Valve
†Thermostatic Mixing Valve

Parts/Components

	Model	Description
1	ELR-001	Module
2	243.153.00.1	Batteries and Holder
3	243.869.00.1	Long Life Battery
4	243.152.AB.1	Solenoid Valve

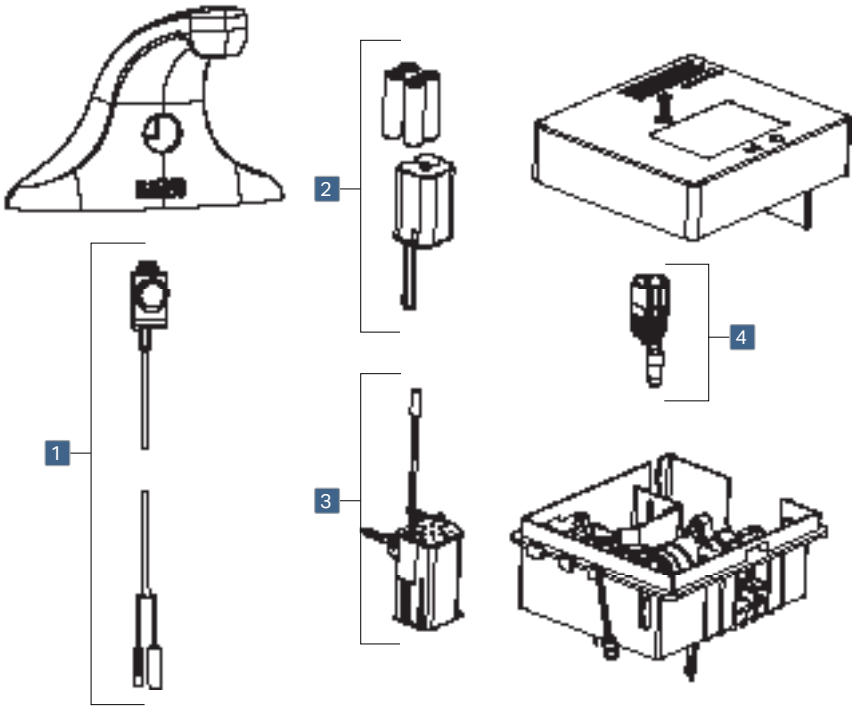

Dimensions

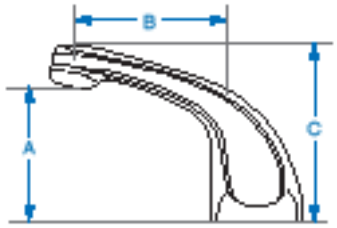

A	B	C	Outlet
3-5/8″	5″	4-3/4″	Female

Outlets

Model	Thread	GPM
243.145.AB.1	Econo-Flo™ non-aerating spray	0.5
243.698.AB.1	Econo-Flo™ non-aerating spray	0.35

CHICAGO FAUCETS.
Geberit Group

E-Tronic® 80 touchless faucet

- Above-deck electronics for fast installation and easy maintenance
- Available with single or dual supply
- Dual supply includes user adjustable temperature control option
- Available with integral ASSE 1070 compliant thermostatic protection
- Optional Commander™ handheld unit to maintain and monitor faucet
- Choice of AC, DC, and Long Term Power Supply (LTPS)
- Polished chrome finish

	Power Source				Mixer			Flow Rate	
	AC	DC	EBPS	LTPS	None	Mechanical	Thermostatic	0.35 GPM	0.5 GPM
E80-A11D-41ABCP	■	—	—	—	■	—	—	■	—
E80-A11A-41ABCP	■	—	—	—	■	—	—	—	■
E80-A11H-41ABCP^	■	—	—	—	■	—	—	—	■
E80-A11D-46ABCP*	■	—	—	—	—	■	—	■	—
E80-A11A-46ABCP*	■	—	—	—	—	■	—	—	■
E80-A11H-46ABCP^	■	—	—	—	—	■	—	—	■
E80-A11D-47ABCP†	■	—	—	—	—	—	■	■	—
E80-A11A-47ABCP†	■	—	—	—	—	—	■	—	■
E80-A11H-47ABCP†^	■	—	—	—	—	—	■	—	■
E80-A11D-11ABCP	—	■	—	—	■		—	■	—
E80-A11A-11ABCP	—	■	—	—	■		—	—	■
E80-A11H-11ABCP^	—	■	—	—	■		—	—	■
E80-A11D-16ABCP*	—	■	—	—	—	■	—	■	—
E80-A11A-16ABCP*	—	■	—	—	—	■	—	—	■
E80-A11H-16ABCP^	—	■	—	—	—	■	—	—	■
E80-A11D-17ABCP†	—	■	—	—	—	—	■	■	—
E80-A11A-17ABCP†	—	■	—	—	—	—	■	—	■
E80-A11H-17ABCP†^	—	■	—	—	—	—	■	—	■
E80-A11D-61ABCP	—	—	—	■	■		—	■	—
E80-A11A-61ABCP	—	—	—	■	■		—	—	■
E80-A11H-61ABCP^	—	—	—	■	■		—	—	■
E80-A11D-66ABCP*	—	—	—	■	—	■	—	■	—
E80-A11A-66ABCP*	—	—	—	■	—	■	—	—	■
E80-A11H-61ABCP*^	—	—	—	■	—	■	—	—	■
E80-A11D-67ABCP†	—	—	—	■	—	—	■	■	—
E80-A11A-67ABCP†	—	—	—	■	—	—	■	—	■
E80-A11H-61ABCP†^	—	—	—	■	—	—	■	—	■

*Mechanical Mixing Valve

†Thermostatic Mixing Valve

^Laminar

Parts/Components

	Model	Description
1	244.458.00.1	Module
2	244.456.00.1	Solenoid
3	244.466.00.1	Internal Mixer
4	244.462.00.1	User Adjustable Mixer
5	242.560.00.1	6V Lithium Battery
6	240.747.00.1	AC Power Adapter
7	243.867.00.1	Long Life Battery
8	243.868.00.1	Long Life Battery Adapter

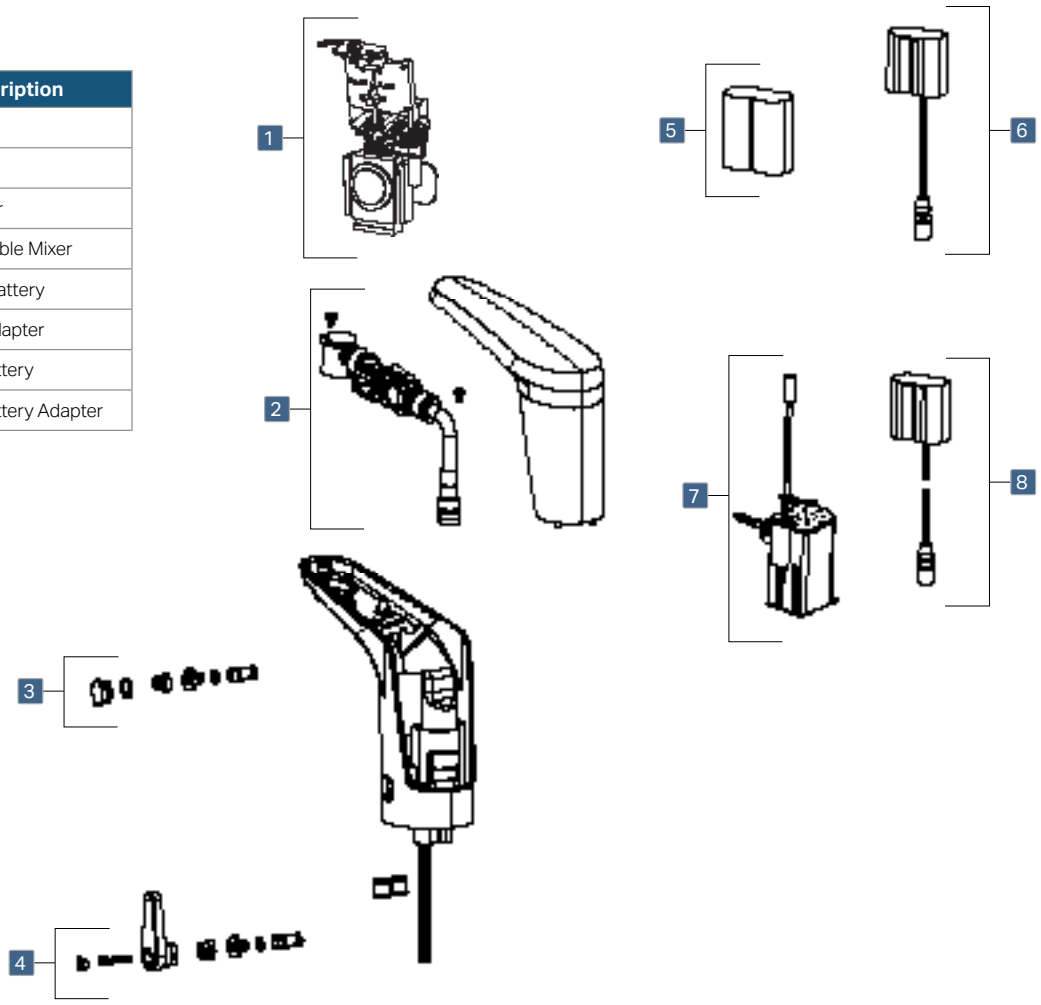

Dimensions

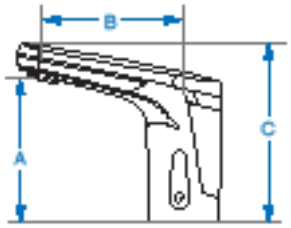

A	B	C	Outlet
4-7/8″	6-7/8″	6-1/8″	Female

Outlets

Model	Thread	GPM
243.145.AB.1	Econo-Flo™ non-aerating spray	0.5
244.168.00.1	Laminar flow outlet	0.5
244.169.00.1	Laminar flow outlet	1.5
244.170.00.1	Laminar flow outlet	1.0
243.698.AB.1	Econo-Flo™ non-aerating spray	0.35

CHICAGO FAUCETS.
Geberit Group

E-Tronic® 80 soap dispenser

- Hands-free operation means improved hygiene
- Automatically dispenses a pre-measured amount
- Choice of foam or liquid soap models
- Choice of AC or DC power
- Polished chrome finish

	Power Source		Soap	
Model	AC	DC	Foam	Liquid
E80-SDF-4CP	■	—	■	—
E80-SDF-1CP	—	■	■	—
E80-SDL-4CP	■	—	—	■
E80-SDL-1CP	—	■	—	■

E-Tronic® 40 touchless faucet

- Above-deck electronics for faster installation and easier maintenance
- Single supply
- Available with external ASSE 1070 compliant thermostatic protection
- Optional Commander™ handheld unit to maintain and monitor faucet
- Choice of: AC, DC, AC with Emergency Backup Power Supply (EBPS), or Self-Sustaining Power Supply (SSPS)
- Polished chrome finish

	Power Source					Mixer			
Model	AC	DC	EBPS	LTPS	SSPS	None	External Mechanical	External Thermostatic	0.5 GPM
116.706.AB.1	■	—	—	—	—	■	—	—	■
116.606.AB.1	—	■	—	—	—	■	—	—	■
116.707.AB.1	—	—	■	—	—	■	—	—	■
116.699.AB.1*	—	—	—	■	—	■	—	—	■
116.956.AB.1	—	—	—	—	■	■	—	—	■
116.966.AB.1	—	—	—	—	■	—	■	—	■
116.976.AB.1	—	—	—	—	■	—	—	■	■

*Not available with CF*Now!* shipping.

Parts/Components

	Model	Description
1	1922-009K	Outlet Assembly - Liquid
	1922-015K	Outlet Assembly - Foam
2	1922-010K	Mounting Hardware
3	1922-007K	Sensor Assembly
4	1922-016K	Soap Bottle
5	1922-008K	Control Box - Foam
	1922-011K	Control Box - Liquid
6	1922-013K	Plug-In Transformer (AC)
7	1922-014K	Battery Holder (DC)
8	1922-012K	ESD CV Housing Liquid & Foam

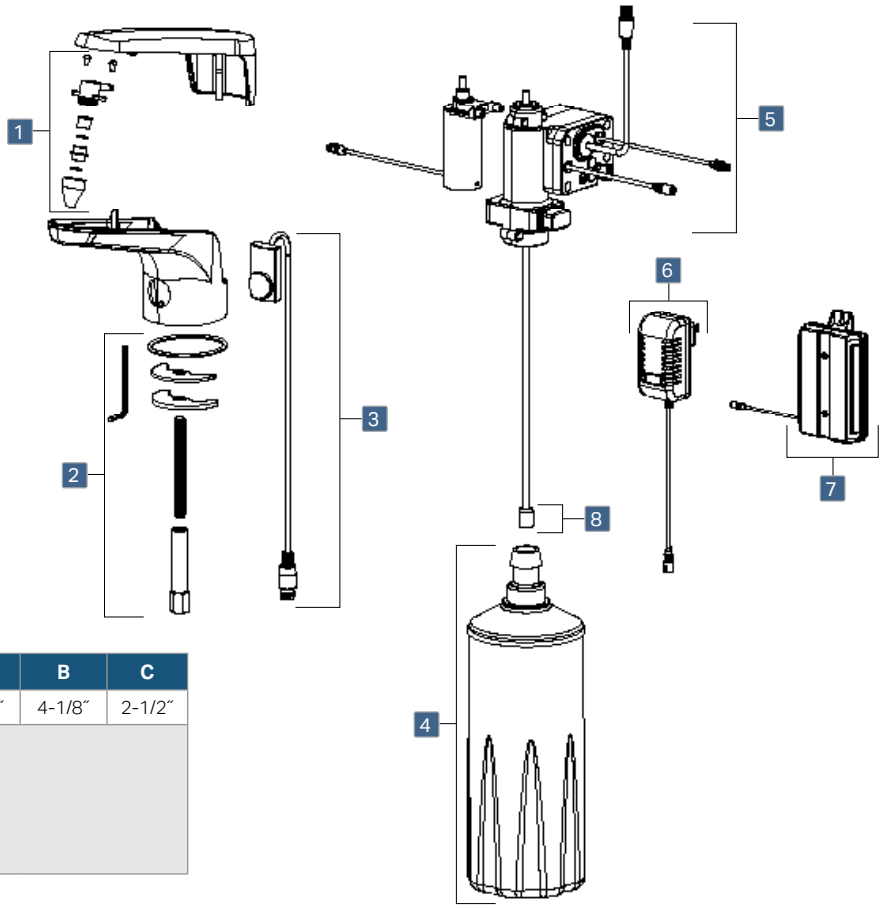

Dimensions

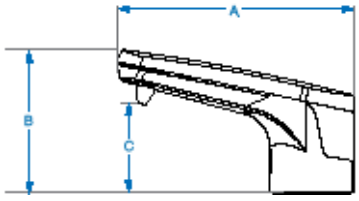

A	B	C
6-7/8″	4-1/8″	2-1/2″

Parts/Components

	Model	Description
1	242.575.00.1	Module
2	243.152.AB.1	Solenoid
3	242.338.21.1	Spout Cover

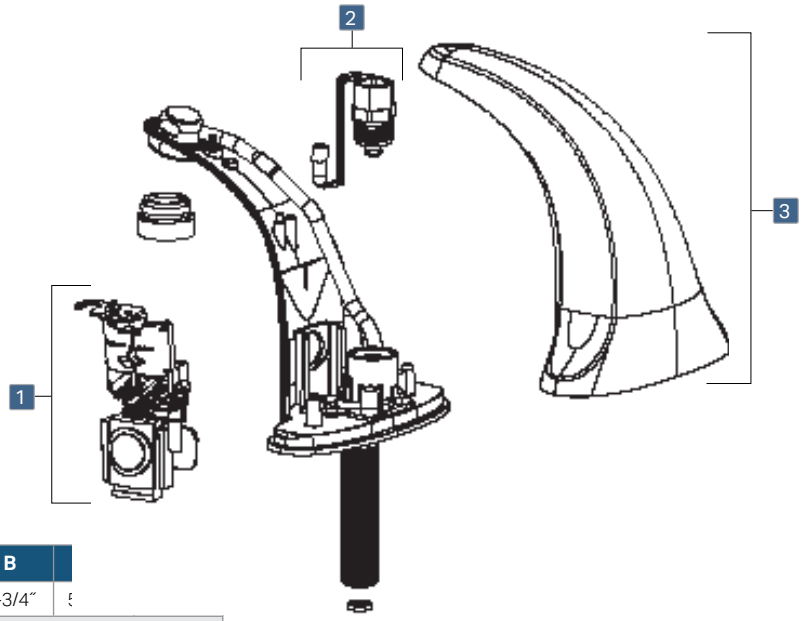

Dimensions

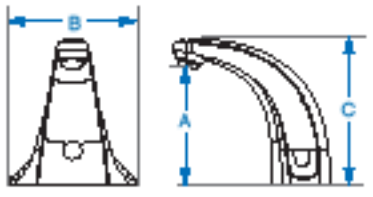

A	B
5-3/8″	5-3/4″

Outlets

Model	Thread	GPM
Non-Aerated Outlet Spray Vandal Resistant		
E2805	13/16″ - 27 Male	0.5

CHICAGO FAUCETS.
Geberit Group

Alpina® Series - Alento touchless faucet

- Single hole
- Stainless steel supply hoses included
- Available with concealed mechanical mixing valve
- Choice of AC or DC power
- Polished chrome finish

	Power Source		Mixer		Flow Rate
Model	AC	DC	None	Concealed	0.5 GPM
APN-B11A-31ABCP	■	—	■	—	■
APN-B11A-32ABCP	■	—	—	■	■
APN-B11A-11ABCP	—	■	■	—	■
APN-B11A-12ABCP	—	■	—	■	■

Alpina® Series - Avisio® touchless faucet

- Single hole
- Stainless steel supply hoses included
- Available with concealed mechanical mixing valve
- Choice of AC or DC power
- Polished chrome finish

	Power Source		Mixer		Flow Rate
Model	AC	DC	None	Concealed	0.5 GPM
APN-P11A-31ABCP	■	—	■	—	■
APN-P11A-32ABCP	■	—	—	■	■
APN-P11A-11ABCP	—	■	■	—	■
APN-P11A-12ABCP	—	■	—	■	■

Dimensions

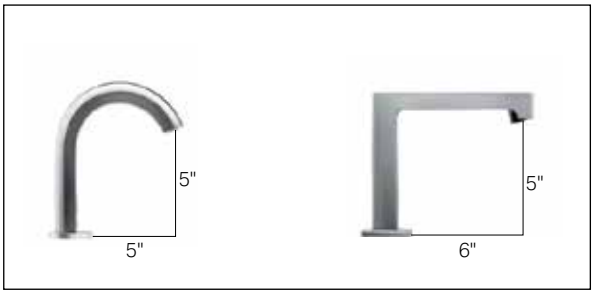

CHICAGO FAUCETS®
Geberit Group

Deck-Mounted Single-Handle Metering Sink Faucets

Deck-mounted metering sink faucet
Series: 333

- 1/2" NPSM supply inlets and coupling nut for 3/8" or 1/2" flexible riser
- MVP™ metering cartridge
- Polished chrome finish

Model	Cartridge	Handle	Outlet
333-336PSHABCP	NAIAD	336	E12
333-665E39VPSHABCP	MVP	665	E39VP
333-665PSHABCP	MVP	665	E12
333-665PSHVPAABCP	MVP	665	E12VP
333-E2805-665PSHAB	MVP	665	E2805

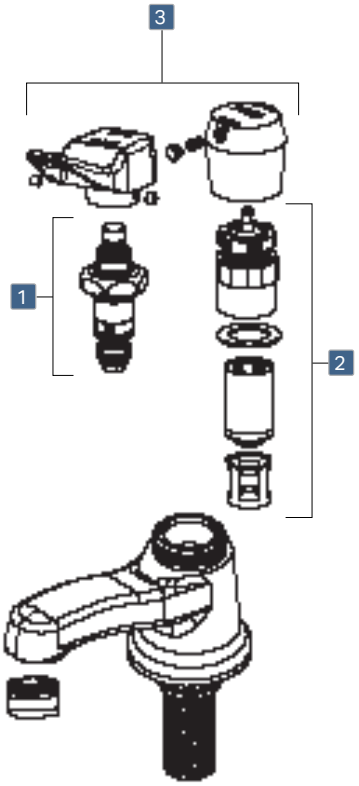

Cartridges

	Model	Description
	NAIAD	
1	335-X	Adjustable metering cartridge
	MVP	
2	667-080K	MVP cartridge and actuator

Handles

	Model	Description	
3	336	2-13/16" push-tilt handle	
	665	1-3/4" MVP metering push handle	

Spout Dimensions

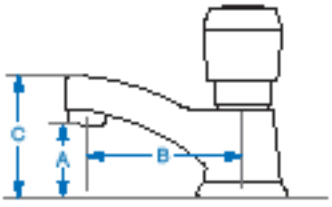

Model	A	B	C	Outlet
333	1-1/2"	3-1/2"	2-5/8"	Female

Outlets

Model	Thread	GPM
Aerated Standard		
E12	13/16" - 27 UNS Male	2.2
Aerated Vandal Resistant		
E12VP	13/16" - 27 UNS Male	2.2
Non-Aerated Spray Vandal Resistant		
E39VP	13/16" - 27 UNS Male	0.35
E2805	13/16" - 27 UNS Male	0.5

Deck-mounted metering sink faucet
Series: 701

- 2-5/8" high integral cast brass spout
- Self-closing cartridge
- Single hole
- 2.2 GPM flow rate

Model	Cartridge	Handle	Outlet
701-COLDABCP	Klo-Self	633-COLD	E12

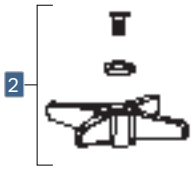

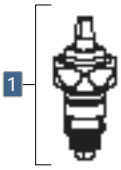

Cartridge

	Model	Description
1	826-X	Self-closing cartridge

Handle

	Model	Description	
2	633	3" cross handle	

Spout Dimensions

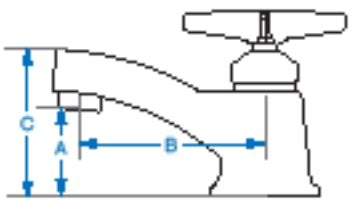

Model	A	B	C	Outlet
700	1-1/2"	3-1/2"	2-5/8"	Female

Outlet

Model	Thread	GPM
Aerated Standard		
E12	13/16" - 27 UNS Male	2.2

CHICAGO FAUCETS.
Geberit Group

Deck-mounted metering sink faucet

Series: 807, 844, 857

- 1-5/8" high cast brass spout
- Single hole or 4" cover plate
- Flow rates from 0.5, 1.5, or 2.2 GPM

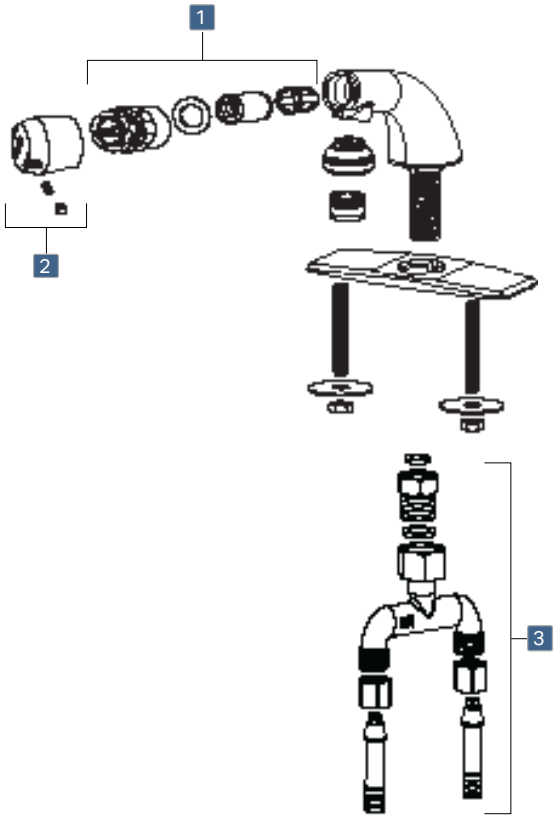

Single Hole, Single Supply

Model	Cartridge	Handle	Outlet
807-665PSHABCP	MVP	665	E15
807-E12-665PAB	MVP	665	E12
807-E12V665PSHAB	MVP	665	E12VP
807-E2805-665PSHAB	MVP	665	E2805

4" Cover Plate, Single Supply

Model	Cartridge	Handle	Outlet
857-665PSHABCP	MVP	665	E15
857-E12-665PSHABCP	MVP	665	E12
857-E12V665PSHAB	MVP	665	E12VP
857-E2805-665PSHAB	MVP	665	E2805

4" Cover Plate, Dual Supply*

Model	Cartridge	Handle	Outlet
844-665PSHABCP	MVP	665	E15
844-E12-665PSHABCP	MVP	665	E12

*Includes connection assembly and inlet check tailpieces to prevent cross-flow.

Cartridge

	Model	Description
1	667-080K	MVP cartridge and actuator

Handle

	Model	Description	
2	665	1-3/4" MVP metering push handle	

Dual Supply Connection Assembly

	Model	Description
3	1-143K	Connection assembly
	58-018K	Tailpiece

Spout Dimensions

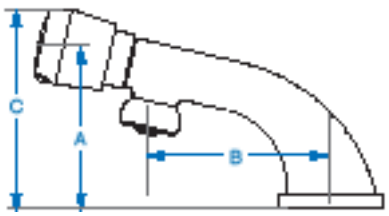

Model	A	B	C	Outlet
807	3-1/2"	4-1/4"	4-1/8"	Female

Outlets

Model	Thread	GPM
Spray		
E15	13/16" - 27 UNS Male	1.5
Aerated Standard		
E12	13/16" - 27 UNS Male	2.2
Aerated Vandal Resistant		
E12VP	13/16" - 27 UNS Male	2.2
Non-Aerated Spray Vandal Resistant		
E2805	13/16" - 27 UNS Male	0.5

Deck-mounted metering sink faucet
Series: 3400

Model	Cartridge	Handle	Outlet
3400-ABCP	MVP	3400	E2805

- 2-7/8" high integral cast brass spout
- 4" centers
- 0.5 GPM flow rate

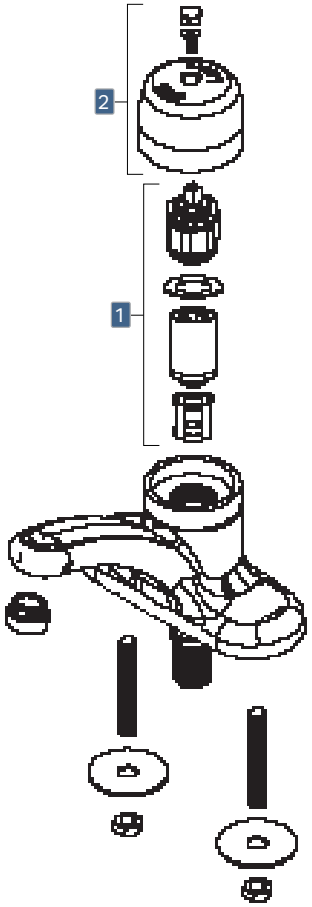

Cartridge

	Model	Description
1	3300-103K	Actuator and cartridge

Handle

	Model	Description	
2	3400	2-1/4" MVP metering push handle	

Spout Dimensions

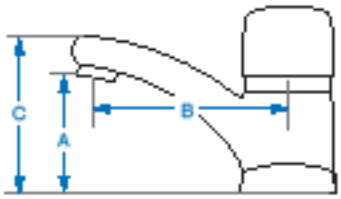

Model	A	B	C	Outlet
3400	2-7/8"	4-3/4"	3-7/8"	Female

Outlet

Model	Thread	GPM
Non-Aerated Spray Vandal Resistant		
E2805	13/16" - 27 UNS Male	0.5

CHICAGO FAUCETS.
Geberit Group

Deck-mounted metering sink faucet
Series: 3500

- 2-3/8" high integral cast brass spout
- Single hole
- 0.5 GPM flow rate

Model	Supply	Cartridge	Handle	Outlet
3500-E2805ABCP	Single	MVP	3500-004	E2805
3501-E2805ABCP*	Dual	MVP	3500-004	E2805
3502-E2805ABCP+	Dual	MVP	3500-004	E2805

*With internal mixer.
+With user-adjustable mixer.

Deck-mounted metering sink faucet
Series: 3500

- 2-3/8" high integral cast brass spout
- With 4" cover plate
- 0.5 GPM flow rate

Model	Supply	Cartridge	Handle	Outlet
3500-4E2805ABCP	Single	MVP	3500-004	E2805
3501-4E2805ABCP*	Dual	MVP	3500-004	E2805
3502-4E2805ABCP+	Dual	MVP	3500-004	E2805

*With internal mixer.
+With user-adjustable mixer.

Deck-mounted metering sink faucet
Series: 3500

- 2-3/8" high integral cast brass spout
- With 8" cover plate
- 0.5 GPM flow rate

Model	Supply	Cartridge	Handle	Outlet
3500-8E2805ABCP	Single	MVP	3500-004	E2805

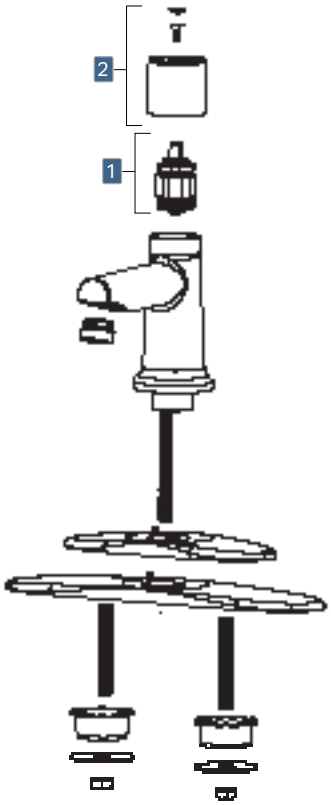

Cartridge

	Model	Description
1	3300-103K	MVP cartridge and actuator

Handle

	Model	Description	
2	3500-004	1-5/8" MVP metering push handle	

Spout Dimensions

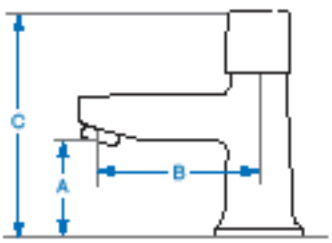

Model	A	B	C	Outlet
3500	2-3/8"	4"	5-5/8"	Female

Outlet

Model	Thread	GPM
Non-Aerated Spray Vandal Resistant		
E2805	13/16" - 27 UNS Male	0.5

CHICAGO FAUCETS.
Geberit Group

Deck-mounted metering sink faucet

Series: 3600

- 3" high integral cast brass spout
- 4" centers
- Flow rates from 0.35 to 1.5 GPM

Model	Cartridge	Handle	Outlet
3600-E2805AB	Metering	3300-402	E2805
3600-E28AB	Metering	3300-402	E28
3600-E34VPAB	Metering	3300-402	E34VP
3600-E39VPAB	Metering	3300-402	E39VP

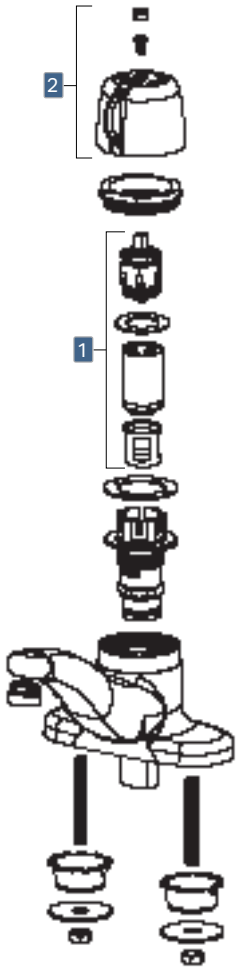

Cartridge

	Model	Description
1	3300-412K	Actuator assembly
	671-X	MVP metering cartridge

Handle

	Model	Description	
2	3300-402	2-1/4" MVP metering push handle	

Spout Dimensions

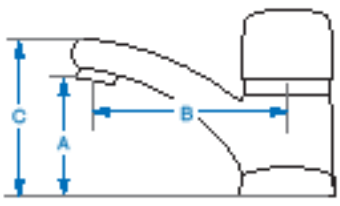

Model	A	B	C	Outlet
3400	3"	5-5/8"	4-1/8"	Female

Outlets

Model	Thread	GPM
Aerated Vandal Resistant		
E34VP	13/16" - 27 UNS Male	1.5
Non-Aerated Spray Vandal Resistant		
E39VP	13/16" - 27 UNS Male	0.35
E2805	13/16" - 27 UNS Male	0.5
Spray Vandal Resistant		
E28	13/16" - 27 UNS Male	1.0

CHICAGO FAUCETS®
Geberit Group

Deck-Mounted Two-Handle Metering Sink Faucets

Deck-mounted manual sink faucet
Series: 404

- 3″ high cast brass spout
- 8″ fixed centers
- Fully adjustable 6″ - 26″ centers available
- Single supply models available
- Flow rates from 0.5 to 2.2 GPM

Model	Cartridge	Handle	Outlet
404-665ABCP	MVP	665	E12
404-V665ABCP	MVP	665	E12VP
404-VE2805-665ABCP	MVP	665	E2805
404-HZ665ABCP*	MVP	665	E12

*6″ - 26″ adjustable centers.

Deck-mounted manual sink faucet
Series: 405

- 5-5/8″ high cast brass spout
- 8″ fixed centers
- Fully adjustable 6″ - 26″ centers available
- Single supply models available
- Flow rates from 0.5 to 2.2 GPM

Model	Cartridge	Handle	Outlet
405-665AB	MVP	665	E12
405-V665AB	MVP	665	E12VP
405-VE2805-665AB	MVP	665	E2805
405-H665AB*	MVP	665	E12

*6″ - 26″ adjustable centers.

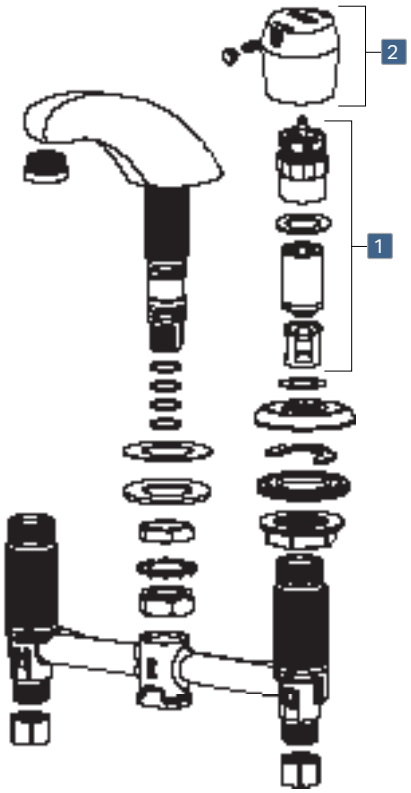

Cartridge

	Model	Description
1	**Metering**	
	667-080K	MVP cartridge and actuator

Handles

	Model	Description	
2	665	1-3/4" MVP metering push handle	

Spout Dimensions

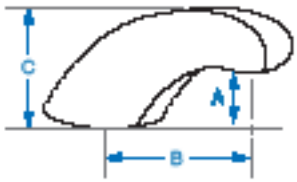

Model	A	B	C	Outlet
404	1-3/4"	5"	2-7/8"	Female

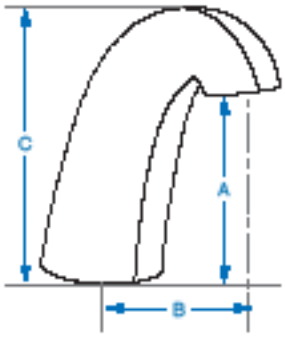

Model	A	B	C	Outlet
405	4-1/8"	5"	4-5/8"	Female

Outlets

Model	Thread	GPM
Aerated Vandal Resistant		
E12VP	13/16" - 27 UNS Male	2.2
Aerated Standard		
E12	13/16" - 27 UNS Male	2.2
Non-Aerated Spray Vandal Resistant		
E2805	13/16" - 27 UNS Male	0.5

CHICAGO FAUCETS.
Geberit Group

Deck-mounted manual sink faucet
Series: 786

- 8" centers
- 1/2" NPSM supply inlets and coupling nut for 3/8" or 1/2" flexible riser
- MVP™ metering cartridges
- Polished chrome finish
- 2.2 GPM flow rate

Model	Cartridge	Handle	Outlet	Spout
786-E3-665ABCP	MVP	665	E3	GN2A
786-G1AE3-665AB	MVP	665	E3	GN1A

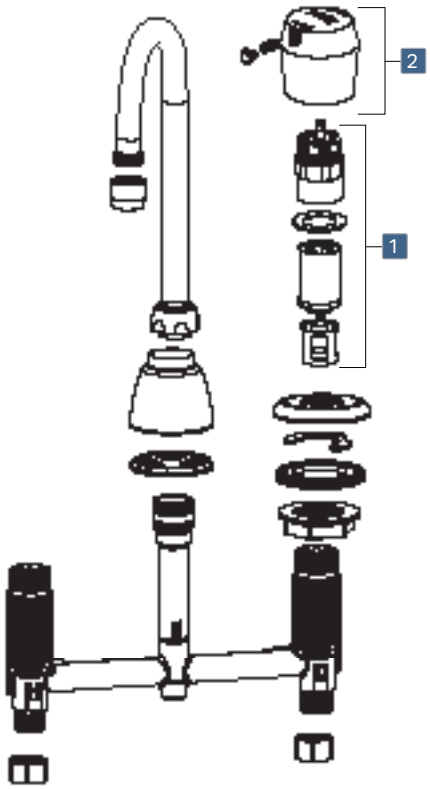

Cartridge

	Model	Description
	Metering	
1	667-080K	MVP cartridge and actuator

Handles

	Model	Description	
2	665	1-3/4" MVP metering push handle	

Spout Dimensions

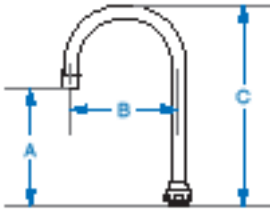

Model	A	B	C	Outlet
Gooseneck Rigid/Swing				
GN1A	5-7/8"	3-1/2"	8-3/8"	Male
GN2A	6-1/8"	5-1/4"	9-3/4"	Male

Outlet

Model	Thread	GPM
Aerated Standard		
E3	13/16" - 24 UNS Female	2.2

Deck-mounted manual sink faucet
Series: 802

- 4" centers
- 1/2" NPSM supply inlets and coupling nut for 3/8" or 1/2" flexible riser
- MVP™ or NAIAD metering cartridges
- Polished chrome finish
- Flow rates of 0.5 or 2.2 GPM

Model	Cartridge	Handle	Outlet
802-665ABCP	MVP	665	E12
802-V665ABCP	MVP	665	E12VP
802-VE2805-665ABCP	MVP	665	E2805
802-336ABCP	NAIAD	336	E12

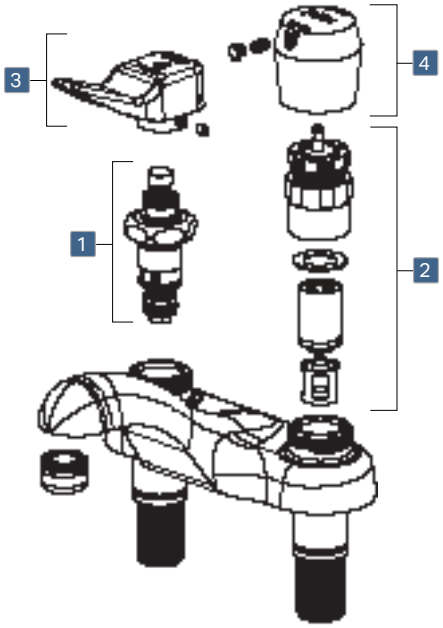

Cartridges

	Model	Description
	NAIAD	
1	335-X	Adjustable metering cartridge
	MVP	
2	667-080K	MVP cartridge and actuator

Handles

	Model	Description	
3	336	2-13/16" push-tilt handle	
4	665	1-3/4" MVP metering push handle	

Spout Dimensions

Model	A	B	C	Outlet
802	1-5/8"	4"	2-3/4"	Female

Outlets

Model	Thread	GPM
Aerated Standard		
E12	13/16" - 27 UNS Male	2.2
Aerated Vandal Resistant		
E12VP	13/16" - 27 UNS Male	2.2
Non-Aerated Spray Vandal Resistant		
E2805	13/16" - 27 UNS Male	0.5

CHICAGO FAUCETS.
Geberit Group

Deck-mounted manual sink faucet
Series: 895

Model	Cartridge	Handle	Outlet	Spout
895-665ABCP	MVP	665	E3	GN1A

- 1/2" NPSM supply inlets and coupling nut for 3/8" or 1/2" flexible riser
- MVP™ metering cartridge
- Polished chrome finish
- 2.2 GPM flow rate

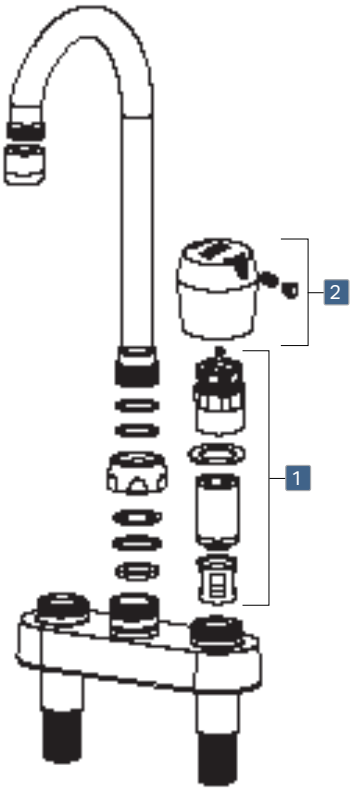

Cartridge

	Model	Description
1	**Metering**	
	667-080K	MVP cartridge and actuator

Handles

	Model	Description	
2	665	1-3/4" MVP metering push handle	

Spout Dimensions

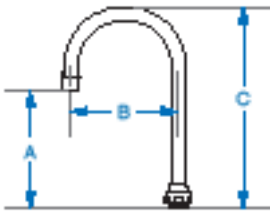

Model	A	B	C	Outlet
Gooseneck Rigid/Swing				
GN1A	5-7/8"	3-1/2"	8-3/8"	Male

Outlet

Model	Thread	GPM
Aerated Standard		
E3	13/16" - 24 UNS Female	2.2

CHICAGO FAUCETS®
Geberit Group

Deck-Mounted Single-Handle Manual Sink Faucets

Deck-mounted manual sink faucet

Series: 349, 350

- Single hole
- Vandal-resistant lever or wristblade handles standard, other options available
- Ceramic or Quaturn™ compression cartridges
- Polished chrome finish
- Flow rates from 1.5 GPM to full flow

Model	Cartridge	Handle	Outlet	Spout
349-ABCP	Quaturn	369	E3	S6
349-E1ABCP	Quaturn	369	E1	S6
349-L12ABCP	Quaturn	369	E3	L12
349-L8ABCP	Quaturn	369	E3	L8
349-L9ABCP	Quaturn	369	E3	L9
349-LESAB	Quaturn	369	–	–
349-LESHAB	Quaturn	–	–	–
349-LESHXKAB	Ceramic	–	–	–
349-LESXKAB	Ceramic	369	–	–
349-XKABCP	Ceramic	369	E3	S6
350-317VPAXKABCP	Ceramic	317	E3VP	GN2A
350-317XKABCP	Ceramic	317	E3	GN2A
350-ABCP	Quaturn	369	E3	GN2A
350-DB6AE35ABCP	Quaturn	369	E35	DB6A
350-DB6AE3ABCP	Quaturn	369	E3	DB6A
350-E1ABCP	Quaturn	369	E1	GN2A
350-E35-317XKABCP	Ceramic	317	E35	GN2A

Model	Cartridge	Handle	Outlet	Spout
350-E35ABCP	Quaturn	369	E35	GN2A
350-E35VP317XKABCP	Ceramic	317	E35VP	GN2A
350-E35VPABCP	Quaturn	369	E35VP	GN2A
350-G8AE29-317XKAB	Ceramic	317	E29	GN8A
350-GN2FCABCP	Quaturn	369	–	GN2FC
350-GN8AE3-317XKAB	Ceramic	317	E3	GN8A
350-GN8AE35ABCP	Quaturn	369	E35	GN8A
350-GN8AE3ABCP	Quaturn	369	E3	GN8A
350-LHABCP	Quaturn	369	E3	GN2A
350-LHE35ABCP	Quaturn	369	E35	GN2A
350-VPAABCP	Quaturn	369	E3VP	GN2A
350-VPAXKABCP	Ceramic	369	E3VP	GN2A
350-XKABCP	Ceramic	369	E3	GN2A

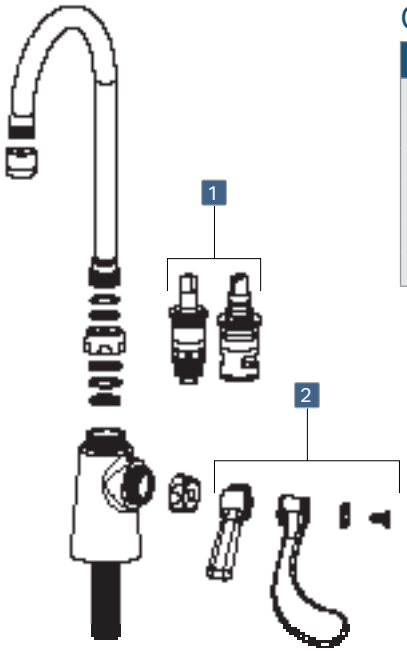

Cartridges

	Model	Description
1	**Quaturn™ Compression**	
	1-099XT	Short stem, right
	1-100XT	Short stem, left
	Ceramic	
	1-099XK	Short stem, right
	1-100XK	Short stem, left

Handles

	Model	Description	
2	317	4" wristblade Vandal proof	
	369	2-3/8" lever Vandal proof	

Spouts

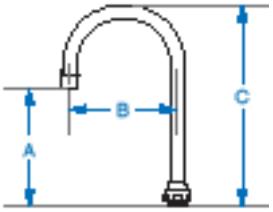

Model	A	B	C	Outlet
Gooseneck Rigid/Swing				
GN2A	6-1/8"	5-1/4"	9-3/4"	Male
GN8A	6"	8"	11-1/4"	Male
Gooseneck 1.5 GPM Laminar Insert				
GN2FC	6-1/8"	5-1/4"	9-3/4"	Plain

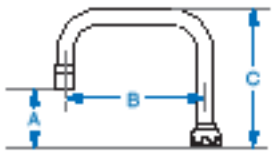

Model	A	B	C	Outlet
Double-Bend Rigid/Swing				
DB6A	3-1/8"	6-1/4"	6-3/8"	Male

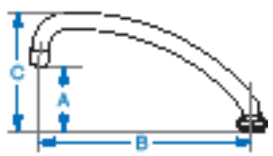

Model	A	B	C	Outlet
L-Type Rigid/Swing				
L8	2-7/8"	8"	4-3/8"	Male
L9	3-3/4"	9-1/2"	6-1/2"	Male
L12	2-3/8"	12"	4-5/8"	Male

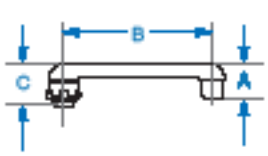

Model	A	B	C	Outlet
S-Type Swing				
S6	1-3/8"	6"	1-5/8"	Male

Outlets

Model	Thread	GPM
Aerated Vandal Resistant		
E3VP	13/16" - 24 UNS Female	2.2
Aerated Standard		
E35	13/16" - 24 UNS Female	1.5
E3	13/16" - 24 UNS Female	2.2
Non-Aerated Full Flow		
E1	13/16" - 24 UNS Female	Full
Laminar Standard		
E29	13/16" - 24 UNS Female	2.2

CHICAGO FAUCETS.
Geberit Group

Deck-mounted manual sink faucet
Series: 410

- 2-3/4" high cast brass spout
- Single hole
- 4" and 8" accessory plates available
- Flow rates from 0.35 to 1.5 GPM

ECAST

Model	Cartridge	Outlet
410-E39VPABCP	Ceramic	E39
410-E2805ABCP	Ceramic	E2805
410-E64VPABCP	Ceramic	E64VP
410-E64VPPOABCP*	Ceramic	E64VP
410-E37VPABCP	Ceramic	E37VP
410-E37VPPOABCP*	Ceramic	E37VP

*With pop-up drain assembly.

Deck-mounted manual sink faucet
Series: 410-T

- Thermostatic ceramic cartridge with built-in check valve and scald protection
- 2-3/4" high cast brass spout
- Single hole
- 4" and 8" accessory plates available
- Flow rates from 0.35 to 1.5 GPM

ECAST TempShield

Model	Cartridge	Outlet
410-T41E39VPABCP	Thermostatic Ceramic*	E39
410-T41E2805ABCP	Thermostatic Ceramic*	E2805
410-T41E64VPABCP	Thermostatic Ceramic*	E64VP
410-T41E37VPABCP	Thermostatic Ceramic*	E37VP

*106ºF maximum temperature.

Cartridges

	Model	Description
	Ceramic	
1	410-X	With volume control and hot water limit stop
	420-X41	Thermostatic ceramic cartridge with built-in check valve and scald protection

Handle

	Model	Description	
2	420-030K	4-1/4" lever handle	

Spout Dimensions

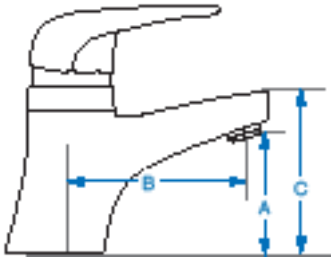

Model	A	B	C	Outlet
410	2-3/4"	4-1/2"	3-7/8"	Female

Outlets

Model	Thread	GPM
Non-Aerated Spray		
E39	13/16" - 27 UNS Male	0.35
Non-Aerated Spray Vandal Resistant		
E2805	13/16" - 27 UNS Male	0.5
Laminar Vandal Resistant		
E37VP	13/16" - 27 UNS Male	1.5
E64VP	13/16" - 27 UNS Male	1.0

CHICAGO FAUCETS.
Geberit Group

Deck-mounted manual sink faucet
Series: 420

- 2-3/4" high cast brass spout
- 4" centers
- Flow rates from 0.35 to 1.5 GPM

Model	Cartridge	Outlet
420-ABCP	Ceramic	E37
420-E2805ABCP	Ceramic	E2805
420-E2805MPABCP	Ceramic	E2805
420-E39ABCP	Ceramic	E39
420-POABCP*	Ceramic	E37
420-E74ABCP	Ceramic	E74
420-MPABCP+	Ceramic	E37
420-POMPABCP*+	Ceramic	E37

*With pop-up drain assembly.
+ Master pack with 6 units.

Deck-mounted manual sink faucet
Series: 420-T

- Thermostatic ceramic cartridge with built-in check valve and scald protection
- 2-3/4" high cast brass spout
- 4" centers
- Flow rates from 0.35 to 1.5 GPM

Model	Cartridge	Outlet
420-T41ABCP	Thermostatic Ceramic	E37
420-T41E2805ABCP	Thermostatic Ceramic	E2805
420-T41E39VPABCP	Thermostatic Ceramic	E39VP
420-T41E74ABCP	Thermostatic Ceramic	E74

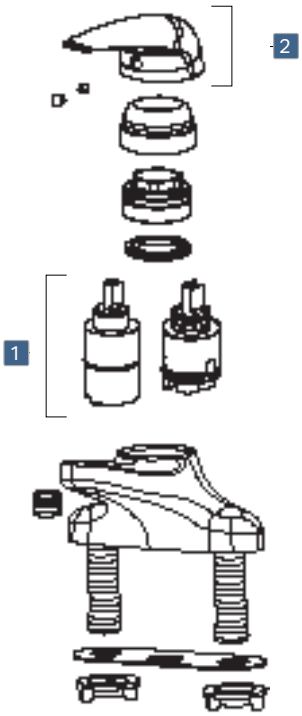

Cartridges

	Model	Description
		Ceramic
1	410-X	With volume control and hot water limit stop
	420-X41	Thermostatic ceramic cartridge with built-in check valve and scald protection

Handle

	Model	Description	
2	420-030K	4-1/4" lever handle	

Spout Dimensions

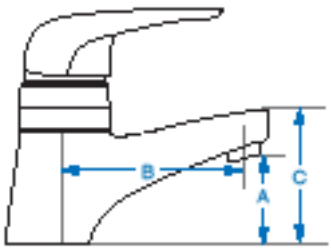

Model	A	B	C	Outlet
420	2"	4-5/8"	3-1/4"	Female

Outlets

Model	Thread	GPM
Non-Aerated Spray		
E39	13/16" - 27 UNS Male	0.35
Non-Aerated Spray Vandal Resistant		
E39VP	13/16" - 27 UNS Male	0.35
E2805	13/16" - 27 UNS Male	0.5
Laminar		
E37	13/16" - 27 UNS Male	1.5
E74	13/16" - 27 UNS Male	1.0

CHICAGO FAUCETS.
Geberit Group

Deck-mounted manual sink faucet

Series: 430, 431, 432

- 8" center-to-center tubular brass spout
- Single hole or 8" cover plate
- 1.5 GPM flow rate
- Available with side spray

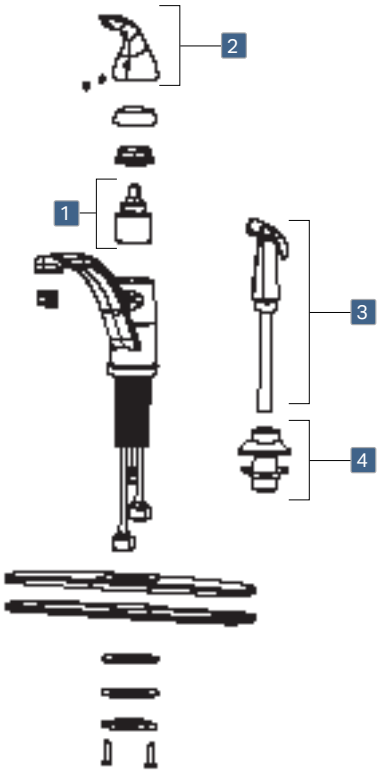

Single Hole

Model	Cartridge	Outlet
430-ABCP	Ceramic	E37
430-MPABCP+	Ceramic	E37

8" Cover Plate

Model	Cartridge	Outlet
431-ABCP	Ceramic	E37
431-MPABCP+	Ceramic	E37

8" Cover Plate, Side Spray

Model	Cartridge	Outlet
432-ABCP	Ceramic	E37
432-MPABCP+	Ceramic	E37

+ Master pack with 6 units.

Cartridge

	Model	Description
	Ceramic	
1	430-X	With volume control and hot water limit stop

Handle

	Model	Description	
2	430-001K	Lever handle	

Spray

	Model	Description
3	1103-419K	Spray and hose assembly
4	1103-014K	Flange assembly

Spout Dimensions

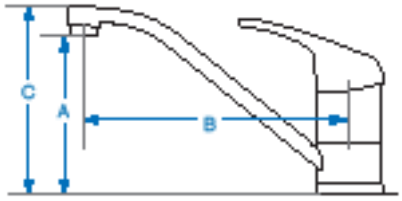

Model	A	B	C	Outlet
430	4-3/4"	8"	5-3/4"	Female

Outlets

Model	Thread	GPM
Laminar		
E37	13/16" - 27 UNS Male	1.5

Deck-mounted manual sink faucet

Series: 434

- Kitchen faucet with pull-down spout
- Single hole with 8″ cover plate available
- Dual-pattern 1.5 GPM pull-down outlet
- User adjustable temperature control mixer

Model	Cartridge	Finish	GPM
434-ABCP	Ceramic	Polished chrome	1.5
434-ABBN	Ceramic	Brushed nickel	1.5
434-ABMB	Ceramic	Matte black	1.5

Cartridge

	Model	Description
1	**Ceramic**	
	430-X	With volume control and hot water limit stop

Handle

	Model	Finish
2	434-002KJKCP	Polished chrome
	434-002KJKBN	Brushed nickel
	434-002KJKMB	Matte black

Outlet

	Model	Finish
3	434-001KJKABCP	Polished chrome
	434-001KJKABBN	Brushed nickel
	434-001KJKABMB	Matte black

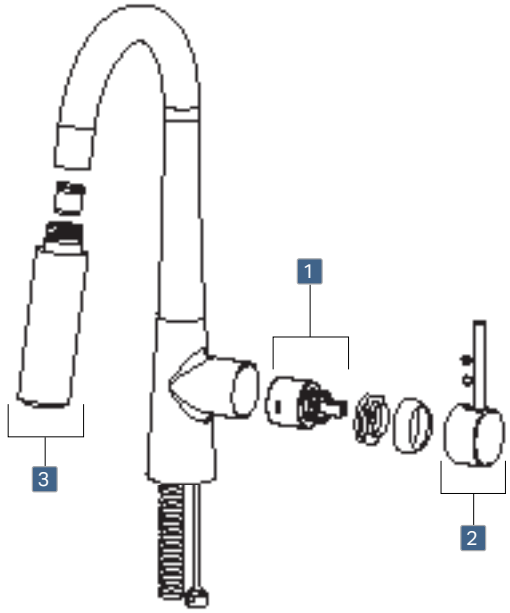

8″ Cover Plates

	Model	Finish
2	434-008KJKCP	Polished chrome
	434-008KJKBN	Brushed nickel
	434-008KJKMB	Matte black

Spout Dimensions

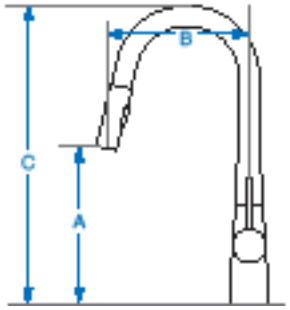

Model	A	B	C	Outlet
434	8-3/4″	8-1/4″	17″	Pull Down

Deck-mounted manual sink faucet

Series: 700, 730

- 2-5/8" high integral cast brass spout
- Single hole
- 2.2 GPM flow rate

Model	Cartridge	Handle	Outlet
700-317COLDABCP	Quaturn	317-COLD	E12
700-317HOTABCP	Quaturn	317-HOT	E12
700-COLDABCP	Quaturn	633-COLD	E12
700-COLDXKABCP	Ceramic	633-COLD	E12
730-COLDABCP	Quaturn	369-COLD	E12
730-COLDXKABCP	Ceramic	369-COLD	E12
730-HOTABCP	Quaturn	369-HOT	E12
730-HOTXKABCP	Ceramic	369-HOT	E12

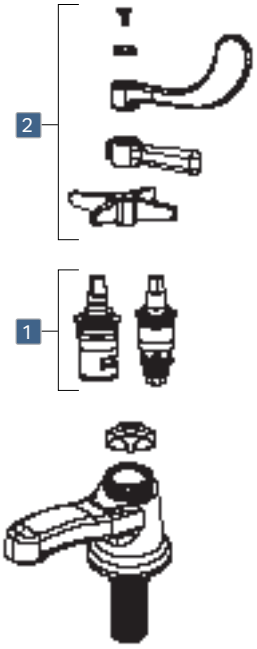

Cartridges

Model		Description
1	**Quaturn™ Compression**	
	1-099XT	Short stem, cold
	1-100XT	Short stem, hot
	Ceramic	
	1-099XK	Short stem, cold
	1-100XK	Short stem, hot

Handles

Model		Description	
2	317	4" wristblade Vandal proof	
	369	2-3/8" lever Vandal proof	
	633	3" cross	

Spout Dimensions

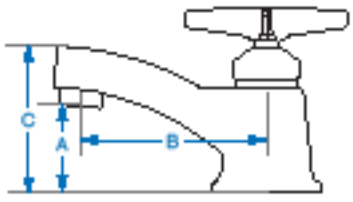

Model	A	B	C	Outlet
700	1-1/2"	3-1/2"	2-5/8"	Female

Outlet

Model	Thread	GPM
Aerated Standard		
E12	13/16" - 27 UNS Male	2.2

Deck-mounted manual sink faucet
Series: 2200

- 2-3/4" high cast brass spout
- Single hole or 4" cover plate
- Choice of 0.5 or 2.2 GPM flow rates

Single Hole

Model	Cartridge	Handle	Outlet
2200-ABCP	Ceramic	2200-225K	E12
2200-E2805ABCP	Ceramic	2200-225K	E2805

4" Cover Plate

Model	Cartridge	Handle	Outlet
2200-4ABCP	Ceramic	2200-225K	E12
2200-4E2805ABCP	Ceramic	2200-225K	E2805
2201-4ABCP*	Ceramic	2200-225K	E12

*With pop-up drain assembly.

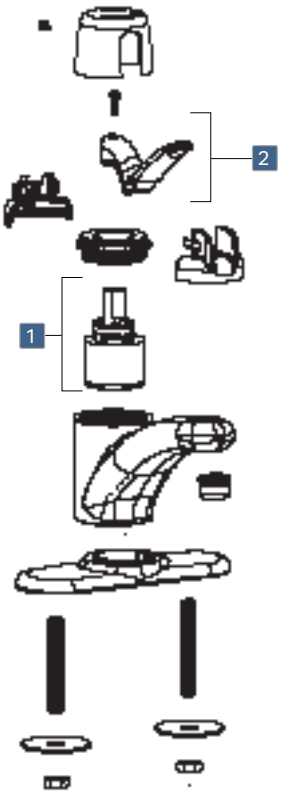

Cartridge

	Model	Description
1	**Ceramic**	
	2300-X	With volume control and hot water limit stop

Handle

	Model	Description	
2	2200-225K	2-3/4" lever handle	

Spout Dimensions

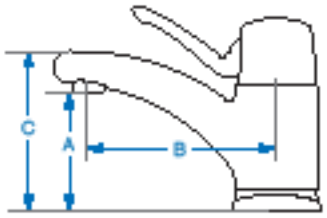

Model	A	B	C	Outlet
2200-4	3"	4-3/4"	6-3/8"	Female

Outlets

Model	Thread	GPM
Aerated Standard		
E12	13/16" - 27 UNS Male	2.2
Non-Aerated Spray Vandal Resistant		
E2805	13/16" - 27 UNS Male	0.5

CHICAGO FAUCETS.
Geberit Group

Deck-mounted manual sink faucet
Series: 2300

- 10" center-to-center cast brass spout
- Single hole or with 8" cover plate
- 2.2 GPM flow rate

Single Hole

Model	Cartridge	Handle	Outlet
2300-ABCP	Ceramic	2300-225K	E12

4" Cover Plate

Model	Cartridge	Handle	Outlet
2300-8ABCP	Ceramic	2300-225K	E12
2301-8ABCP*	Ceramic	2300-225K	E12

*With side spray.

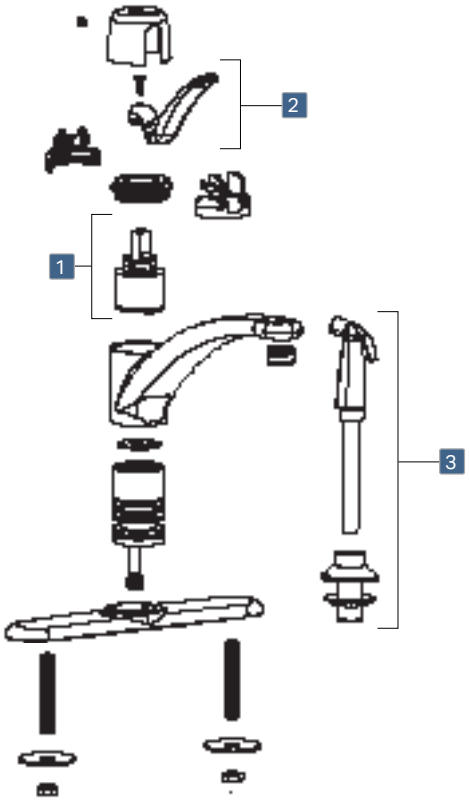

Cartridge

	Model	Description
	Ceramic	
1	2300-X	With volume control and hot water limit stop

Handle

	Model	Description	
2	2300-225K	4-5/8" lever handle	

Side Spray

	Model	Description
3	1103-419K	Spray hose, flange

Spout Dimensions

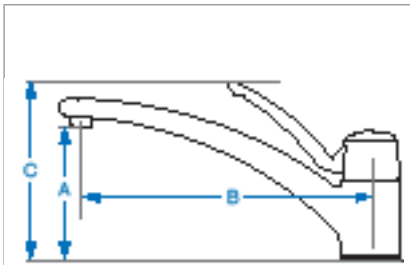

Model	A	B	C	Outlet
2300	4-5/8"	10"	8"	Female

Outlet

Model	Thread	GPM
Aerated Standard		
E12	13/16" - 27 UNS Male	2.2

Deck-mounted manual sink faucet
Series: 2302

- 5-3/8" high rigid/swing gooseneck spout
- Single hole with side valve
- 2.2 GPM flow rate

Model	Cartridge	Outlet
2302-ABCP	Ceramic	E3

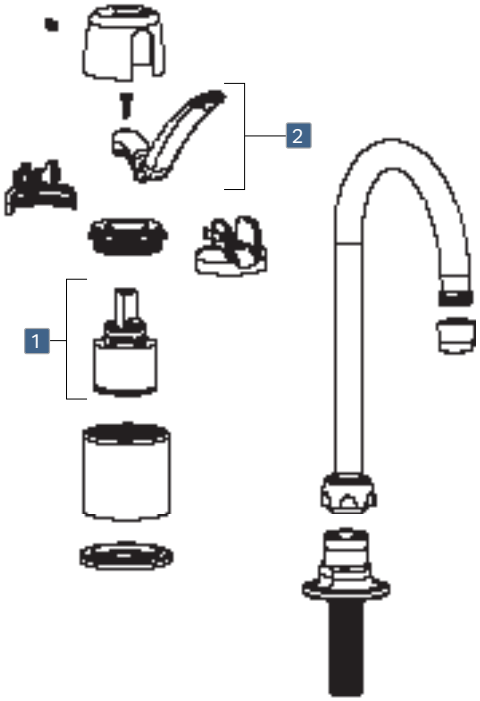

Cartridge

	Model	Description
1	**Ceramic**	
	2300-X	With volume control and hot water limit stop

Handle

	Model	Description	
2	2300-225K	4-5/8" lever handle	

Spout Dimensions

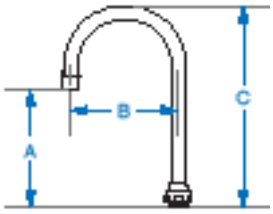

Model	A	B	C	Outlet
Gooseneck Rigid/Swing				
GN2A	6-5/8"	5-3/8"	10-3/4"	Male

Outlet

Model	Thread	GPM
Aerated Standard		
E3	13/16" - 27 UNS Female	2.2

CHICAGO FAUCETS.
Geberit Group

Deck-mounted manual sink faucet
Series: 3512

- 4" center-to-center integral cast brass spout
- Single hole or with 4" cover plate
- Choice of 0.35 or 0.5 GPM flow rates

BUY AMERICAN ACT COMPLIANT

ECAST

Model	Cartridge	Outlet
3512-E39VPAB	Ceramic	E39VP
3512-E2805AB	Ceramic	E2805
3512-4E39VPAB*	Ceramic	E39VP
3512-4E2805AB*	Ceramic	E2805

* With 4" cover plate.

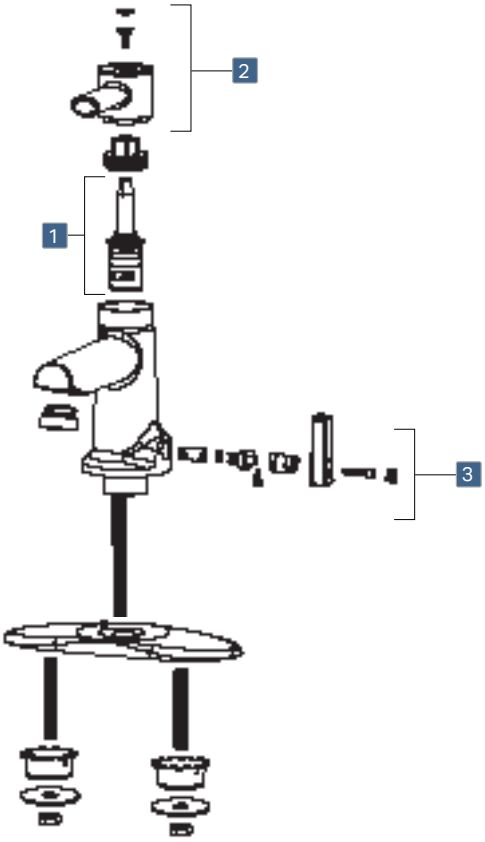

Cartridge

	Model	Description
1	**Ceramic**	
	377-XKLH	Long stem, left

Handle

	Model	Description
2	3500-015	Lever handle

Mixing Lever

	Model	Description
3	3500-003K	Mixing handle

Spout Dimensions

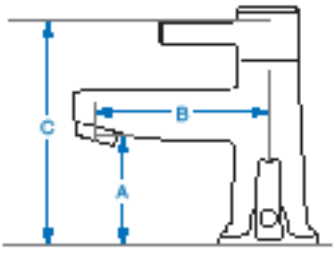

Model	A	B	C	Outlet
3512	2-3/4"	4"	6"	Female

Outlets

Model	Thread	GPM
Non-Aerated Spray Vandal Resistant		
E39VP	13/16" - 27 UNS Male	0.35
Non-Aerated Spray Vandal Resistant		
E2805	13/16" - 27 UNS Male	0.5

CHICAGO FAUCETS®
Geberit Group

Deck-Mounted Two-Handle Manual Sink Faucets

Deck-mounted manual sink faucet

Series: 50, 51

- Single hole
- Vandal-resistant lever or wristblade handles standard, other options available
- Ceramic or Quaturn™ compression cartridges
- 3/8" compression flexible stainless steel supply hoses or 3-1/2" tee connection
- Polished chrome finish

Model	Cartridge	Handle	Outlet	Spout
50-317XKABCP	Ceramic	317	E3	GN2A
50-T317XKABCP*	Ceramic	317	E3	GN2A
50-E35-317XKABCP	Ceramic	317	E35	GN2A
50-GN2FC317XKABCP	Ceramic	317	–	GN2FC
50-GN8AE3-317XKAB	Ceramic	317	E3	GN8A
50-L9-317XKABCP	Ceramic	317	E3	L9
50-LES317XKAB	Ceramic	317	–	–
50-GN1AE3ABCP	Quaturn	369	E3	GN1A
50-E1ABCP	Quaturn	369	E1	GN2A
50-E2805-5ABCP	Quaturn	369	E2805-5	GN2A
50-ABCP	Quaturn	369	E3	GN2A
50-TABCP*	Quaturn	369	E3	GN2A
50-TXKABCP*	Ceramic	369	E3	GN2A
50-XKABCP	Ceramic	369	E3	GN2A
50-E35ABCP	Quaturn	369	E35	GN2A
50-TE35ABCP*	Quaturn	369	E35	GN2A
50-E35VPABCP	Quaturn	369	E35VP	GN2A

Model	Cartridge	Handle	Outlet	Spout
50-VPAABCP	Quaturn	369	E3VP	GN2A
50-GN2FCABCP	Quaturn	369		GN2FC
50-GN8AE3ABCP	Quaturn	369	E3	GN8A
50-TGN8AE3ABCP*	Quaturn	369	E3	GN8A
50-GN8AE35ABCP	Quaturn	369	E35	GN8A
50-HA8ABCP	Quaturn	369	E3	HA8A
50-LESAB	Quaturn	369	–	–
50-LESXKAB	Ceramic	369	–	–
50-TLESAB*	Quaturn	369	–	–
50-LESHAB	Quaturn	–	–	–
50-LESHXKAB	Ceramic	–	–	–
51-L8ABCP	Quaturn	369	E3	L8
51-ABCP	Quaturn	369	E3	S6
51-TABCP*	Quaturn	369	E3	S6
51-XKABCP	Ceramic	369	E3	S6
51-E35ABCP	Quaturn	369	E35	S6

*Includes 3-1/2" inlet connection tee

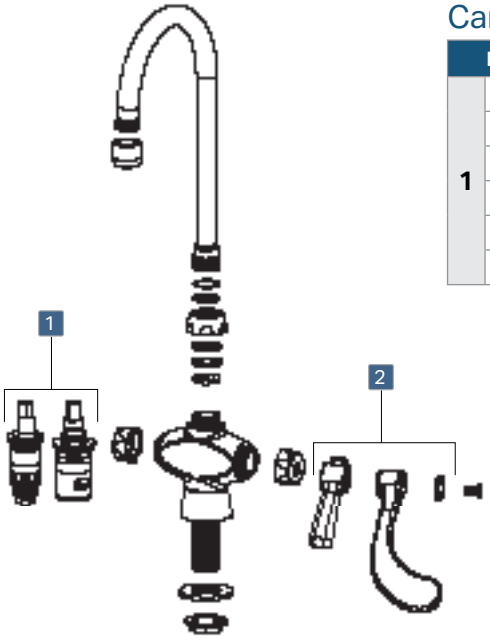

Cartridges

	Model	Description
1	**Quaturn™ Compression**	
	1-099XT	Short stem, right
	1-100XT	Short stem, left
	Ceramic	
	1-099XK	Short stem, right
	1-100XK	Short stem, left

Handles

	Model	Description	
2	317	4" wristblade Vandal proof	
	369	2-3/8" lever Vandal proof	

Spouts

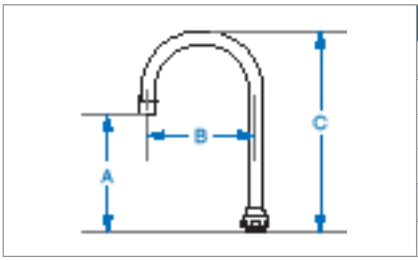

Model	A	B	C	Outlet
Gooseneck Rigid/Swing				
GN1A	5-7/8"	3-1/2"	8-3/8"	Male
GN2A	6-1/8"	5-1/4"	9-3/4"	Male
GN8A	6"	8"	11-1/4"	Male
Gooseneck 1.5 GPM Laminar Insert				
GN2FC	6-1/8"	5-1/4"	9-3/4"	Plain

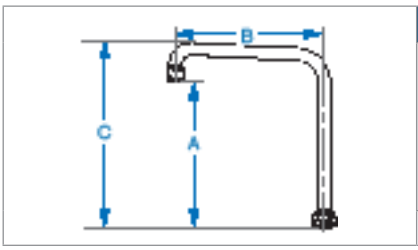

Model	A	B	C	Outlet
High Arch Rigid/Swing				
HA8A	8-3/8"	8"	10"	Male

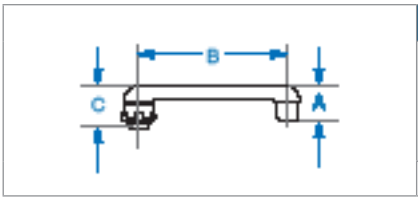

Model	A	B	C	Outlet
S-Type Swing				
S6	1-3/8"	6"	1-5/8"	Male

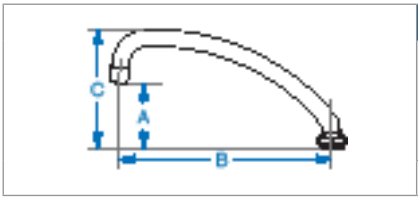

Model	A	B	C	Outlet
L-Type Rigid/Swing				
L9	3-3/4"	9-1/2"	6-1/2"	Male

Outlets

Model	Thread	GPM
Aerated Vandal Resistant		
E35VP	13/16" - 24 UNS Female	1.5
E3VP	13/16" - 24 UNS Female	2.2
Aerated Standard		
E35	13/16" - 24 UNS Female	1.5
E3	13/16" - 24 UNS Female	2.2
Non-Aerated Spray Vandal Resistant		
E2805-5	13/16" - 24 UNS Female	0.5

CHICAGO FAUCETS.
Geberit Group

Deck-mounted manual sink faucet

Series: 200

- 8" centers
- Includes side spray
- Vandal-resistant lever or wristblade handles standard, other options available
- Ceramic or Quaturn™ compression cartridges
- Polished chrome finish

Model	Cartridge	Handle	Outlet	Spout
200-AGN2AE3-317AB	Quaturn	317	E3	GN2A
200-AGN8AE3-317AB	Quaturn	317	E3	GN8A
200-GN8AE3-317XKAB	Ceramic	317	E3	GN8A
200-AGN8AE35-317AB	Quaturn	317	E35	GN8A
200-G8AE35-317XKAB	Ceramic	317	E35	GN8A
200-AHA8-317ABCP	Quaturn	317	E3	HA8A
200-AL8-317ABCP	Quaturn	317	E3	L8
200-AL8E35-317ABCP	Quaturn	317	E35	L8
200-A317ABCP	Quaturn	317	E3	L9
200-A317XKABCP	Ceramic	317	E3	L9

Model	Cartridge	Handle	Outlet	Spout
200-AE35-317ABCP	Quaturn	317	E35	L9
200-AGN8AE3ABCP	Quaturn	369	E3	GN8A
200-AGN8AE3VPCABCP	Quaturn	369	E3VP	GN8A
200-AHA8ABCP	Quaturn	369	E3	HA8A
200-AL8ABCP	Quaturn	369	E3	L8
200-AABCP	Quaturn	369	E3	L9
200-AXKABCP	Ceramic	369	E3	L9
200-AE35ABCP	Quaturn	369	E35	L9
200-ALESHAB	Quaturn	–	–	–
200-ALESHXKAB	Quaturn	–	–	–

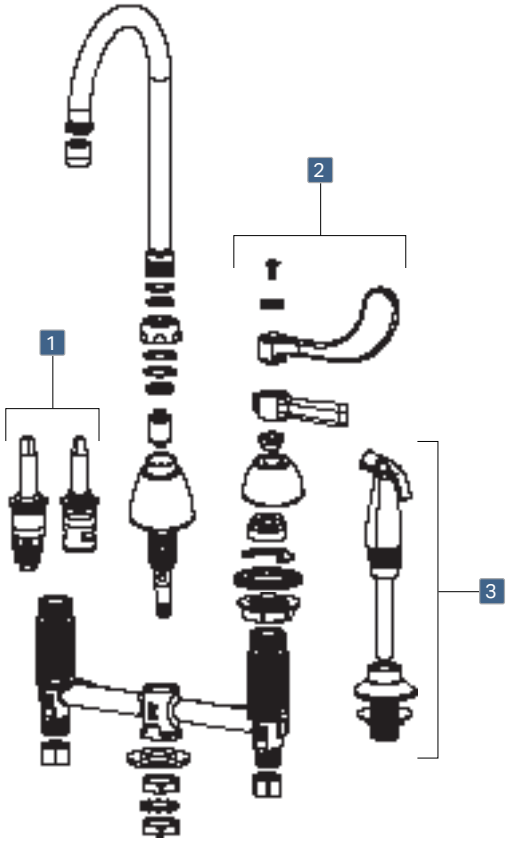

Cartridges

	Model	Description
1	**Quaturn™ Compression**	
	377-XTRH	Long stem, right
	377-XTLH	Long stem, left
	Ceramic	
	377-XKRH	Long stem, right
	377-XKLH	Long stem, left

Handles

	Model	Description	
2	317	4" wristblade Vandal proof	
	369	2-3/8" lever Vandal proof	

Side Spray

	Model	Description
3	1103-419K	Spray hose, flange

Spouts

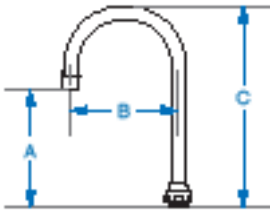

Model	A	B	C	Outlet
Gooseneck Rigid/Swing				
GN2A	6-1/8"	5-1/4"	9-3/4"	Male
GN8A	6"	8"	11-1/4"	Male
Gooseneck 1.5 GPM Laminar Insert				
GN2FC	6-1/8"	5-1/4"	9-3/4"	Plain

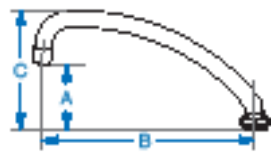

Model	A	B	C	Outlet
L-Type Rigid/Swing				
L8	2-7/8"	8"	4-3/8"	Male
L9	3-3/4"	9-1/2"	6-1/2"	Male

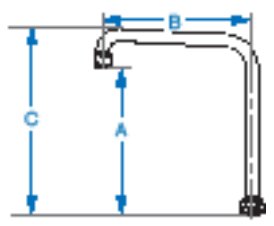

Model	A	B	C	Outlet
High Arch Rigid/Swing				
HA8A	8-3/8"	8"	10"	Male

Outlets

Model	Thread	GPM
Aerated Vandal Resistant		
E3VP	13/16" - 24 UNS Female	2.2
Aerated Standard		
E35	13/16" - 24 UNS Female	1.5
E3	13/16" - 24 UNS Female	2.2

CHICAGO FAUCETS.
Geberit Group

Deck-mounted manual sink faucet

Series: 201

- 1/2" NPSM supply inlets and coupling nut for 3/8" or 1/2" flexible riser
- Vandal-resistant lever, wristblade or single wing canopy handles standard, other options available
- Ceramic or Quaturn™ compression cartridges
- Polished chrome finish

Model	Cartridge	Handle	Outlet	Spout
201-ADB6AE3-317AB	Quaturn	317	E3	DB6A
201-AGN2AE3-317AB	Quaturn	317	E3	GN2A
201-GN2AE3-317XKAB	Ceramic	317	E3	GN2A
201-G8AE2805F317AB	Quaturn	317	E2805-5	GN8A
201-AGN8AE35-317AB	Quaturn	317	E35	GN8A
201-AGN8AE35V317AB	Quaturn	317	E35VP	GN8A
201-AGN8AFC317ABCP	Quaturn	317	–	GN8AFC
201-AHA8-317ABCP	Quaturn	317	E3	HA8A
201-AL8E29V317XKAB	Ceramic	317	E29VP	L8
201-AL8-317ABCP	Quaturn	317	E3	L8
201-AL8-317XKABCP	Ceramic	317	E3	L8
201-A317ABCP	Quaturn	317	E3	L9
201-A317XKABCP	Ceramic	317	E3	L9
201-AE35-317ABCP	Quaturn	317	E35	L9
201-AGN8AE35-319AB	Quaturn	319	E35	GN8A
201-AGN8AFC319ABCP	Quaturn	319	–	GN8AFC
201-AGN8AE2805FAB	Quaturn	369	E2805-5	GN8A
201-AGN8AE3XKABCP	Ceramic	369	E3	GN8A
201-AGN8AE35ABCP	Quaturn	369	E35	GN8A
201-AGN8AE35VPABCP	Quaturn	369	E35VP	GN8A
201-AHA8ABCP	Quaturn	369	E3	HA8A
201-AHA8XKABCP	Ceramic	369	E3	HA8A

Model	Cartridge	Handle	Outlet	Spout
201-AHA8AE35ABCP	Quaturn	369	E35	HA8A
201-AL8ABCP	Quaturn	369	E3	L8
201-AL8XKABCP	Ceramic	369	E3	L8
201-AE29XKABCP	Ceramic	369	E29	L9
201-AABCP	Quaturn	369	E3	L9
201-AXKABCP	Ceramic	369	E3	L9
201-AE35ABCP	Quaturn	369	E35	L9
201-AVPCABCP	Quaturn	369	E3VP	L9
201-AGN2AE3-1000AB	Quaturn	1000	E3	GN2A
201-GN8AE29-1000AB	Quaturn	1000	E29	GN8A
201-AGN8AE3-1000AB	Quaturn	1000	E3	GN8A
201-AGN8FC1000ABCP	Quaturn	1000	–	GN8FC
201-AHA8-1000ABCP	Quaturn	1000	E3	HA8A
201-AL8-1000ABCP	Quaturn	1000	E3	L8
201-A1000ABCP	Quaturn	1000	E3	L9
201-A1000XKABCP	Ceramic	1000	E3	L9
201-AE35-1000ABCP	Quaturn	1000	E35	L9
201-L9E35V1000AB	Quaturn	1000	E35VP	L9
201-A1000XKLESHAB	Ceramic	–	–	–
201-ALESHAB	Quaturn	–	–	–
201-ALESHXKAB	Ceramic	–	–	–

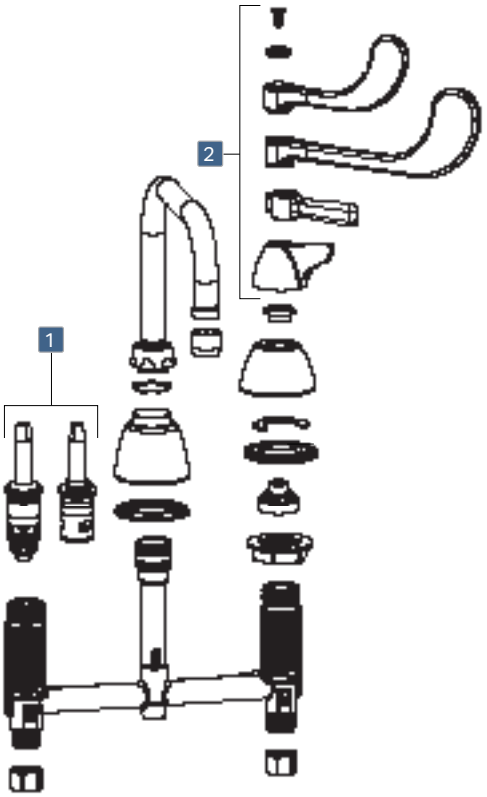

Cartridges

	Model	Description
1	**Quaturn™ Compression**	
	377-XTRH	Long stem, right
	377-XTLH	Long stem, left
	Ceramic	
	377-XKRH	Long stem, right
	377-XKLH	Long stem, left

Handles

	Model	Description	
2	317	4" wristblade Vandal proof	
	319	6" elbow Vandal proof	
	369	2-3/8" lever Vandal proof	
	1000	2" canopy Vandal proof	

Spouts

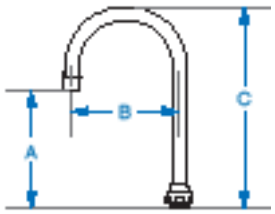

Model	A	B	C	Outlet
Gooseneck Rigid/Swing				
GN1A	5-7/8"	3-1/2"	8-3/8"	Male
GN2A	6-1/8"	5-1/4"	9-3/4"	Male
GN8A	6"	8"	11-1/4"	Male
Gooseneck 1.5 GPM Laminar Insert				
GN8AFC	6"	8"	11"	Male
GN2FC	6-1/8"	5-1/4"	9-3/4"	Plain

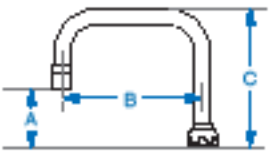

Model	A	B	C	Outlet
Double-Bend Rigid/Swing				
DB6A	3-1/8"	6-1/4"	6-3/8"	Male

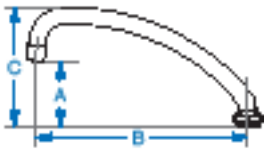

Model	A	B	C	Outlet
L-Type Rigid/Swing				
L8	2-7/8"	8"	4-3/8"	Male
L9	3-3/4"	9-1/2"	6-1/2"	Male

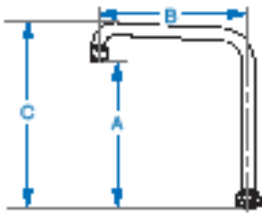

Model	A	B	C	Outlet
High Arch Rigid/Swing				
HA8A	8-3/8"	8"	10"	Male

Outlets

Model	Thread	GPM
Aerated Vandal Resistant		
E35VP	13/16" - 24 UNS Female	1.5
E3VP	13/16" - 24 UNS Female	2.2
Aerated Standard		
E35	13/16" - 24 UNS Female	1.5
E3	13/16" - 24 UNS Female	2.2
Non-Aerated Spray Vandal Resistant		
E2805-5	13/16" - 24 UNS Female	0.5
Laminar Vandal Resistant		
E29VP	13/16" - 24 UNS Female	2.2
Laminar Standard		
E29	13/16" - 24 UNS Female	2.2

CHICAGO FAUCETS.
Geberit Group

Deck-mounted manual sink faucet
Series: 404

- 3" high cast brass spout
- 8" fixed centers
- Fully adjustable 6" - 26" centers available
- Single supply models available
- Available with pop-up drain
- Flow rates from 0.5 to 2.2 GPM

Model	Cartridge	Handle	Outlet
404-317ABCP	Quaturn	317	E12
404-317XKABCP	Ceramic	317	E12
404-V317ABCP	Quaturn	317	E12VP
404-V317XKABCP	Ceramic	317	E12VP
404-VE2805-317ABCP	Quaturn	317	E2805
404-ABCP	Quaturn	390	E12
404-XKABCP	Ceramic	390	E12
404-VABCP	Quaturn	390	E12VP
404-VE2805ABCP	Quaturn	390	E2805
404-V950ABCP	Quaturn	950	E12VP
404-HZ317ABCP	Quaturn	317	E12
404-317XKPOABCP*	Ceramic	317	E12

*With pop-up drain assembly.

Deck-mounted manual sink faucet
Series: 405

- 5-5/8" high cast brass spout
- 8" fixed centers
- Fully adjustable 6" - 26" centers available
- Single supply models available
- Available with pop-up drain
- Flow rates from 0.5 to 2.2 GPM

Model	Cartridge	Handle	Outlet
405-317AB	Quaturn	317	E12
405-317XKAB	Ceramic	317	E12
405-317XKPOAB*	Ceramic	317	E12
405-V317XKAB	Ceramic	317	E12VP
405-V317XKAB	Ceramic	317	E12VP
405-AB	Quaturn	390	E12
405-XKAB	Ceramic	390	E12
405-VAB	Quaturn	390	E12VP
405-V401XKAB	Ceramic	401	E12VP
405-V950AB	Quaturn	950	E12VP
405-LEHAB	Quaturn	–	E12
405-VLEHAB	Quaturn	–	E12VP

*With pop-up drain assembly.

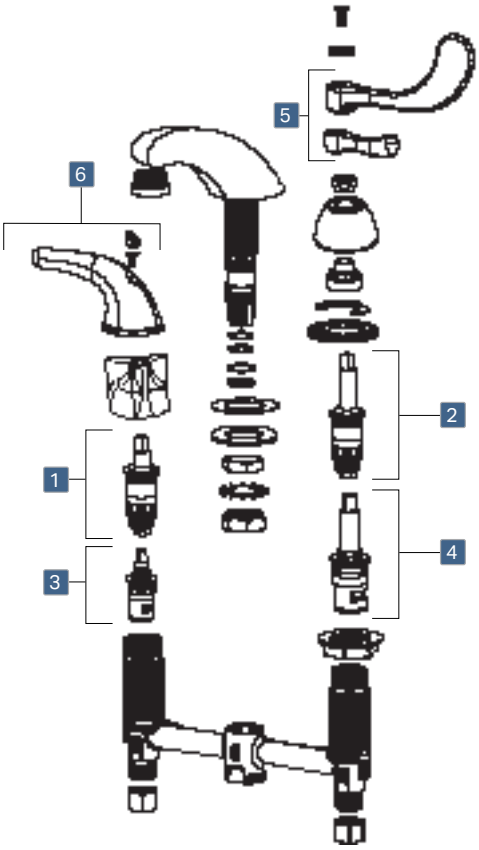

Cartridges

Model		Description
	Quaturn™ Compression	
1	1-099XT	Short stem, right
	1-100XT	Short stem, left
2	377-XTRH	Long stem, right
	377-XTLH	Long stem, left
	Ceramic	
3	1-099XK	Short stem, right
	1-100XK	Short stem, left
4	377-XKRH	Long stem, right
	377-XKLH	Long stem, left

Handles

Model		Description	
5	317	4" wristblade Vandal proof	
	390	2-3/8" lever Vandal proof	
6	401	3-7/8" decorative Vandal proof	
	950	2-1/2" canopy Vandal proof	

Spouts

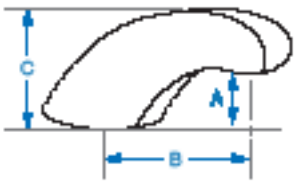

Model	A	B	C	Outlet
404	1-3/4"	5"	2-7/8"	Female

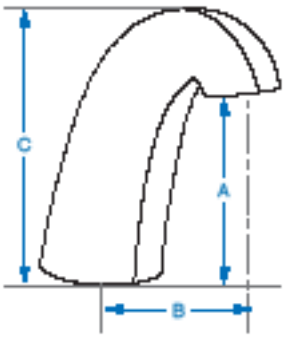

Model	A	B	C	Outlet
405	4-1/8"	5"	4-5/8"	Female

Outlets

Model	Thread	GPM
Aerated Vandal Resistant		
E12VP	13/16" - 27 UNS Male	2.2
Aerated Standard		
E12	13/16" - 27 UNS Male	2.2
Non-Aerated Spray Vandal Resistant		
E2805	13/16" - 27 UNS Male	0.5

CHICAGO FAUCETS.
Geberit Group

Deck-mounted manual sink faucet

Series: 526, 891, 894, 895, 1891, 1895

- 1/2" NPSM supply inlets and coupling nut for 3/8" or 1/2" flexible riser
- Vandal-resistant lever or wristblade handles standard, other options available
- Metering models with push handles also available
- Ceramic or Quaturn™ compression cartridges
- Models available with pop-up drain (894 Series)
- Polished chrome finish

Model	Cartridge	Handle	Outlet	Spout
526-317ABCP	Quaturn	317	E1	DB6A
526-E3-317ABCP	Quaturn	317	E3	DB6A
526-ABCP	Quaturn	369	E1	DB6A
526-XKABCP	Ceramic	369	E1	DB6A
526-E3ABCP	Quaturn	369	E3	DB6A
526-GN2AE1ABCP	Quaturn	369	E1	GN2A
891-317ABCP	Quaturn	317	E3	S6
891-DJ13ABCP	Quaturn	369	E3	DJ13
891-DJ18E1ABCP	Quaturn	369	E1	DJ18
891-DJ18ABCP	Quaturn	369	E3	DJ18
891-ABCP	Quaturn	369	E3	S6
891-XKABCP	Ceramic	369	E3	S6
891-LESAB	Quaturn	369	–	–
894-317ABCP*	Quaturn	317	E3	GN1A
895-317E2805-5ABCP	Quaturn	317	E2805-5	GN1A
895-317E29ABCP	Quaturn	317	E29	GN1A
895-317E29XKABCP	Ceramic	317	E29	GN1A
895-317E29VPABCP	Quaturn	317	E29VP	GN1A
895-317ABCP	Quaturn	317	E3	GN1A
895-317XKABCP	Ceramic	317	E3	GN1A
895-317E35ABCP	Quaturn	317	E35	GN1A
895-317E35XKABCP	Ceramic	317	E35	GN1A
895-317E36ABCP	Quaturn	317	E36	GN1A
895-317VPCABCP	Quaturn	317	E3VP	GN1A
895-317XKVPAABCP	Ceramic	317	E3VP	GN1A
895-317FCABCP	Quaturn	317	–	GN1FC
895-317FCXKABCP	Ceramic	317	–	GN1FC
895-317GN2AE29ABCP	Quaturn	317	E29	GN2A
895-317GN2AE29VAB	Quaturn	317	E29VP	GN2A
895-317GN2AE3ABCP	Quaturn	317	E3	GN2A
895-317GN2AE3XKAB	Ceramic	317	E3	GN2A
895-317GN2AE35ABCP	Quaturn	317	E35	GN2A
895-317GN2AE36ABCP	Quaturn	317	E36	GN2A
895-317GN2AABCP	Quaturn	317	–	GN2A
895-317GN2AFCABCP	Quaturn	317	–	GN2AFC
895-317GN2BE4ABCP	Quaturn	317	E4	GN2B
895-317GN2FCAB	Quaturn	317	–	GN2FC

Model	Cartridge	Handle	Outlet	Spout
895-317GN8AE29VAB	Quaturn	317	E29VP	GN8A
895-317GN8AE3ABCP	Quaturn	317	E3	GN8A
895-317GN8AE35ABCP	Quaturn	317	E35	GN8A
895-317RGD1ABCP	Quaturn	317	E3	GNRGD1
895-317LESAB	Quaturn	317	–	–
895-317LESXKAB	Ceramic	317	–	–
895-319ABCP	Quaturn	319	E3	GN1A
895-GN2AE3-319ABCP	Quaturn	319	E3	GN2A
895-E2805-5ABCP	Quaturn	369	E2805-5	GN1A
895-ABCP	Quaturn	369	E3	GN1A
895-XKABCP	Ceramic	369	E3	GN1A
895-E35ABCP	Quaturn	369	E35	GN1A
895-E35XKABCP	Ceramic	369	E35	GN1A
895-VPCABCP	Quaturn	369	E3VP	GN1A
895-GN2AE3ABCP	Quaturn	369	E3	GN2A
895-GN2AE35ABCP	Quaturn	369	E35	GN2A
895-GN2FCABCP	Quaturn	369	–	GN2FC
895-GN2FCXKABCP	Ceramic	369	–	GN2FC
895-GN8AE3ABCP	Quaturn	369	E3	GN8A
895-L12ABCP	Quaturn	369	E3	L12
895-L12E35ABCP	Quaturn	369	E35	L12
895-L12E72ABCP	Quaturn	369	E72	L12
895-L12E73ABCP	Quaturn	369	E73	L12
895-L8ABCP	Quaturn	369	E3	L8
895-L9ABCP	Quaturn	369	E3	L9
895-LESAB	Quaturn	369	–	–
895-LESXKAB	Ceramic	369	–	–
895-LEHAB	Quaturn	–	E3	GN1A
895-LESHAB	Quaturn	–	–	–
1891-ABCP	Quaturn	1000	E3	S6
1891-XKABCP	Ceramic	1000	E3	S6
1895-ABCP	Quaturn	1000	E3	GN1A
1895-XKABCP	Ceramic	1000	E3	GN1A
1895-E35ABCP	Quaturn	1000	E35	GN1A
1895-GN8AE3ABCP	Quaturn	1000	E3	GN8A
1895-L8ABCP	Quaturn	1000	E3	L8
1895-L9ABCP	Quaturn	1000	E3	L9

*With pop-up drain assembly.

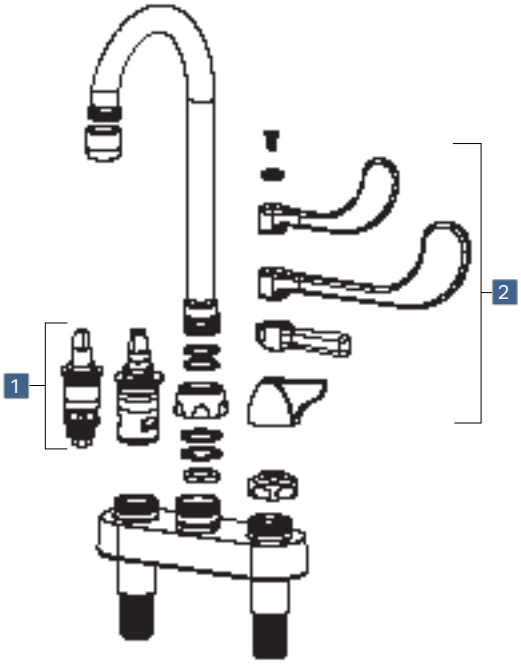

Cartridges

	Model	Description
1	**Quaturn™ Compression**	
	1-099XT	Short stem, right
	1-100XT	Short stem, left
	Ceramic	
	1-099XK	Short stem, right
	1-100XK	Short stem, left

Handles

	Model	Description	
2	317	4" wristblade Vandal proof	
	319	6" elbow Vandal proof	
	369	2-3/8" lever Vandal proof	
	1000	2" canopy Vandal proof	

Spouts

Model	A	B	C	Outlet
Double-Jointed Rigid/Swing				
DJ13	2-1/4"	13"	3-7/8"	Male
DJ18	2-1/4"	17-3/4"	3-7/8"	Male

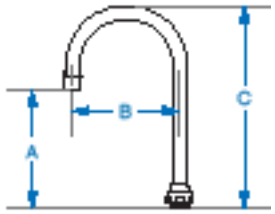

Model	A	B	C	Outlet
Gooseneck Rigid/Swing				
GN1A	5-7/8"	3-1/2"	8-3/8"	Male
GN2A	6-1/8"	5-1/4"	9-3/4"	Male
GN2B	5-5/8"	5-1/4"	9-3/4"	Female
GN8A	6"	8"	11-1/4"	Male
Gooseneck Rigid Only				
GNRGD1	6-1/4"	3-1/2"	8-1/2"	Male
Gooseneck 1.5 GPM Laminar Insert				
GN1FC	5-7/8"	3-1/2"	8-3/8"	Plain
GN2AFC	6-1/8"	5-1/4"	9-3/4"	Male
GN2FC	6-1/8"	5-1/4"	9-3/4"	Plain

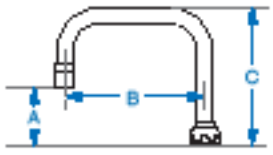

Model	A	B	C	Outlet
Double-Bend Rigid/Swing				
DB6A	3-1/8"	6-1/4"	6-3/8"	Male

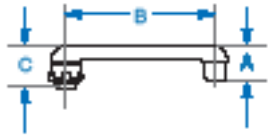

Model	A	B	C	Outlet
S-Type Swing				
S6	1-3/8"	6"	1-5/8"	Male

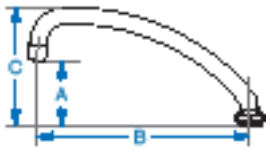

Model	A	B	C	Outlet
L-Type Rigid/Swing				
L8	2-7/8"	8"	4-3/8"	Male
L9	3-3/4"	9-1/2"	6-1/2"	Male
L12	2-3/8"	12"	4-5/8"	Male

Outlets

Model	Thread	GPM
Aerated Vandal Resistant		
E3VP	13/16" - 24 UNS Female	2.2
Aerated Standard		
E35	13/16" - 24 UNS Female	1.5
E3	13/16" - 24 UNS Female	2.2
Non-Aerated Full Flow		
E1	13/16" - 24 UNS Female	Full
Non-Aerated Spray		
E4	3/8" - 18 NPSM Female	1.5
Non-Aerated Spray Vandal Resistant		
E2805-5	13/16" - 24 UNS Female	0.5
Laminar Vandal Resistant		
E29VP	13/16" - 24 UNS Female	2.2
Laminar Standard		
E29	13/16" - 24 UNS Female	2.2
E36	13/16" - 24 UNS Female	1.5
E72	13/16" - 24 UNS Female	0.5
E73	13/16" - 24 UNS Female	1.0

CHICAGO FAUCETS.
Geberit Group

Deck-mounted manual sink faucet

Series: 527, 1100, 1102

- 8" centers
- 1/2" NPSM supply inlets and coupling nut for 3/8" or 1/2" flexible riser
- Vandal-resistant handles standard
- Ceramic or Quaturn™ compression cartridges
- Polished chrome finish

Model	Cartridge	Handle	Outlet	Spout
527-317ABCP	Quaturn	317	E1	DB6A
527-GN2AE3-317ABCP	Quaturn	317	E3	GN2A
527-GN2A317ABCP	Quaturn	317	–	GN2A
527-GN8AE3-317ABCP	Quaturn	317	E3	GN8A
527-HA8-317ABCP	Quaturn	317	E3	HA8A
527-ABCP	Quaturn	369	E1	DB6A
527-XKABCP	Ceramic	369	E1	DB6A
527-GN2AE1ABCP	Quaturn	369	E1	GN2A
527-GN8AE3ABCP	Quaturn	369	E3	GN8A
527-HA8ABCP	Quaturn	369	E3	HA8A
527-L12ABCP	Quaturn	369	E3	L12
527-S6E1ABCP	Quaturn	369	E1	S6
527-LESAB	Quaturn	369	–	–
1100-G2E3-317AB	Quaturn	317	E3	GN2A
1100-GN2AE35-317AB	Quaturn	317	E35	GN2A
1100-GN2AE3V317AB	Quaturn	317	E3VP	GN2A
1100-GN2FC317ABCP	Quaturn	317	–	GN2FC
1100-GN8AE3-317AB	Quaturn	317	E3	GN8A
1100-GN8AE35-317AB	Quaturn	317	E35	GN8A
1100-HA8-317ABCP	Quaturn	317	E3	HA8A
1100-HA8-317XKABCP	Ceramic	317	E3	HA8A
1100-HA8AE35-317AB	Quaturn	317	E35	HA8A
1100-317ABCP	Quaturn	317	E3	L8
1100-317XKABCP	Ceramic	317	E3	L8
1100-E35-317ABCP	Quaturn	317	E35	L8
1100-E35VP317ABCP	Quaturn	317	E35VP	L8
1100-317VPAABCP	Quaturn	317	E3VP	L8
1100-317XKVPCABCP	Ceramic	317	E3VP	L8
1100-L9-317ABCP	Quaturn	317	E3	L9
1100-L9-317XKABCP	Ceramic	317	E3	L9
1100-LES317AB	Quaturn	317	–	–

Model	Cartridge	Handle	Outlet	Spout
1100-LES317XKAB	Ceramic	317	–	–
1100-319ABCP	Quaturn	319	E3	L8
1100-GN8AE3-369AB	Quaturn	369	E3	GN8A
1100-HA8-369ABCP	Quaturn	369	E3	HA8A
1100-HA8-369VPAAB	Quaturn	369	E3VP	HA8A
1100-E2805-5-369AB	Quaturn	369	E2805-5	L8
1100-369ABCP	Quaturn	369	E3	L8
1100-E35-369ABCP	Quaturn	369	E35	L8
1100-GN1AE3ABCP	Quaturn	1000	E3	GN1A
1100-GN2AE3XKABCP	Ceramic	1000	E3	GN2A
1100-GN2AE3VXKAB	Ceramic	1000	E3VP	GN2A
1100-GN8AE3ABCP	Quaturn	1000	E3	GN8A
1100-GN8AE3VPCABCP	Quaturn	1000	E3VP	GN8A
1100-HA8ABCP	Quaturn	1000	E3	HA8A
1100-HA8XKABCP	Ceramic	1000	E3	HA8A
1100-HA8AE35ABCP	Quaturn	1000	E35	HA8A
1100-HA8VPCABCP	Quaturn	1000	E3VP	HA8A
1100-ABCP	Quaturn	1000	E3	L8
1100-XKABCP	Ceramic	1000	E3	L8
1100-E35ABCP	Quaturn	1000	E35	L8
1100-E35XKABCP	Ceramic	1000	E35	L8
1100-L9E29VPABCP	Quaturn	1000	E29VP	L9
1100-L9ABCP	Quaturn	1000	E3	L9
1100-L9E35ABCP	Quaturn	1000	E35	L9
1100-L9VPAXKABCP	Ceramic	1000	E3VP	L9
1100-LESAB	Quaturn	1000	–	–
1100-LESXKAB	Ceramic	1000	–	–
1100-LEHAB	Quaturn	–	E3	L8
1100-LESHAB	Quaturn	–	–	–
1102-ABCP	Quaturn	1000	E3	L8

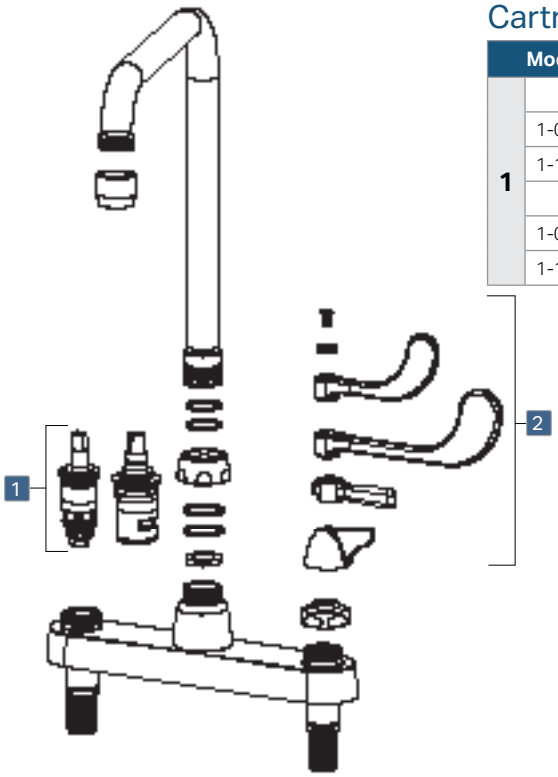

Cartridges

	Model	Description
1	**Quaturn™ Compression**	
	1-099XT	Short stem, right
	1-100XT	Short stem, left
	Ceramic	
	1-099XK	Short stem, right
	1-100XK	Short stem, left

Handles

	Model	Description	
2	317	4" wristblade Vandal proof	
	319	6" elbow Vandal proof	
	369	2-3/8" lever Vandal proof	
	1000	2" canopy Vandal proof	

Spouts

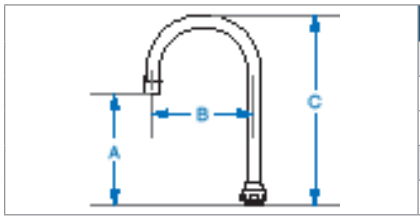

Model	A	B	C	Outlet
Gooseneck Rigid/Swing				
GN2A	6-1/8"	5-1/4"	9-3/4"	Male
GN8A	6"	8"	11-1/4"	Male
Gooseneck 1.5 GPM Laminar Insert				
GN2AFC	6-1/8"	5-1/4"	9-3/4"	Male

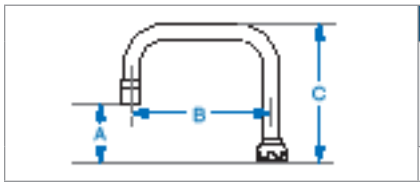

Model	A	B	C	Outlet
Double-Bend Rigid/Swing				
DB6A	3-1/8"	6-1/4"	6-3/8"	Male

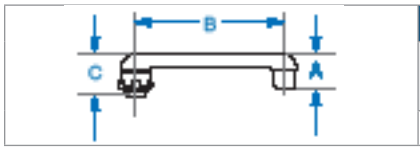

Model	A	B	C	Outlet
S-Type Swing				
S6	1-3/8"	6"	1-5/8"	Male

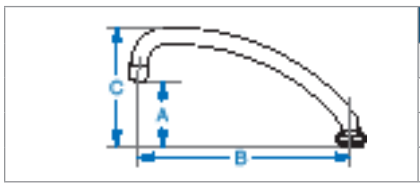

Model	A	B	C	Outlet
L-Type Rigid/Swing				
L8	2-7/8"	8"	4-3/8"	Male
L9	3-3/4"	9-1/2"	6-1/2"	Male
L12	2-3/8"	12"	4-5/8"	Male

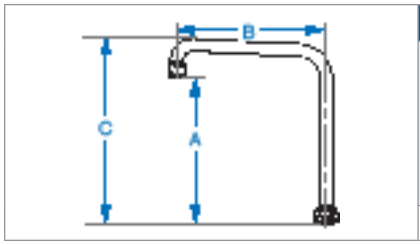

Model	A	B	C	Outlet
High Arch Rigid/Swing				
HA8A	8-3/8"	8"	10"	Male

Outlets

Model	Thread	GPM
Aerated Vandal Resistant		
E35VP	13/16" - 24 UNS Female	1.5
E3VP	13/16" - 24 UNS Female	2.2
Aerated Standard		
E35	13/16" - 24 UNS Female	1.5
E3	13/16" - 24 UNS Female	2.2
Non-Aerated Full Flow		
E1	13/16" - 24 UNS Female	Full
Non-Aerated Spray Vandal Resistant		
E2805-5	13/16" - 24 UNS Female	0.5
Laminar Vandal Resistant		
E29VP	13/16" - 24 UNS Female	2.2
Laminar Standard		
E29	13/16" - 24 UNS Female	2.2

CHICAGO FAUCETS.
Geberit Group

Deck-mounted manual sink faucet

Series: 786

- 8" centers
- 1/2" NPSM supply inlets and coupling nut for 3/8" or 1/2" flexible riser
- Vandal-resistant handles standard
- Ceramic or Quaturn™ and Control-A-Flo compression cartridges
- Polished chrome finish

Model	Cartridge	Handle	Outlet	Spout
786-GN1AE29ABCP	Quaturn	317	E29	GN1A
786-GN1AE29VPABCP	Quaturn	317	E29VP	GN1A
786-GN1AE3ABCP	Quaturn	317	E3	GN1A
786-GN1AE3XKAB	Ceramic	317	E3	GN1A
786-GN1AE35ABCP	Quaturn	317	E35	GN1A
786-GN1FCABCP	Quaturn	317	–	GN1FC
786-E2805-5ABCP	Quaturn	317	E2805-5	GN2A
786-E2805-5VPCABCP	Quaturn	317	E2805-5	GN2A
786-E2805-5XKABCP	Ceramic	317	E2805-5	GN2A
786-E29ABCP	Quaturn	317	E29	GN2A
786-E29VPCABCP	Quaturn	317	E29VP	GN2A
786-E29XKABCP	Ceramic	317	E29	GN2A
786-TWE29ABCP*	Quaturn	317	E29	GN2A
786-TWE29XKABCP*	Ceramic	317	E29	GN2A
786-E29VPXKABCP	Ceramic	317	E29VP	GN2A
786-E3-245ABCP	Control-A-Flow	317	E3	GN2A
786-E3ABCP	Quaturn	317	E3	GN2A
786-E3XKABCP	Ceramic	317	E3	GN2A
786-TWGN2AE3ABCP*	Quaturn	317	E3	GN2A
786-TWGN2AE3XKABCP*	Ceramic	317	E3	GN2A
786-E35ABCP	Quaturn	317	E35	GN2A
786-E35XKABCP	Ceramic	317	E35	GN2A
786-TWGN2AE35ABCP*	Quaturn	317	E35	GN2A
786-E35VPCABCP	Quaturn	317	E35VP	GN2A
786-E36ABCP	Quaturn	317	E36	GN2A
786-E36XKABCP	Ceramic	317	E36	GN2A
786-E3VPCABCP	Quaturn	317	E3VP	GN2A
786-GN2AFCE1ABCP	Quaturn	317	E1	GN2AFC
786-GN2AFCABCP	Quaturn	317	–	GN2AFC
786-TWGN2AFCABCP*	Quaturn	317	–	GN2AFC
786-ABCP	Quaturn	317	E4	GN2B
786-TWABCP*	Quaturn	317	E4	GN2B
786-TWXKABCP*	Ceramic	317	E4	GN2B
786-XKABCP	Ceramic	317	E4	GN2B
786-GN2FCABCP	Quaturn	317	–	GN2FC

Model	Cartridge	Handle	Outlet	Spout
786-GN2FCXKABCP	Ceramic	317	–	GN2FC
786-TWGN2FCABCP*	Quaturn	317	–	GN2FC
786-TWGN2FCXKABCP*	Ceramic	317	–	GN2FC
786-GN8AE29ABCP	Quaturn	317	E29	GN8A
786-GN8AE29VPABCP	Quaturn	317	E29VP	GN8A
786-GN8AE29XKABCP	Ceramic	317	E29	GN8A
786-TWGN8AE29VXKAB*	Ceramic	317	E29VP	GN8A
786-GN8AE3ABCP	Quaturn	317	E3	GN8A
786-GN8AE3XKABCP	Ceramic	317	E3	GN8A
786-TWGN8AE3XKABCP*	Ceramic	317	E3	GN8A
786-GN8AE35ABCP	Quaturn	317	E35	GN8A
786-GN8AE36ABCP	Quaturn	317	E36	GN8A
786-GN8AE3VPCABCP	Quaturn	317	E3VP	GN8A
786-GN8AFCABCP	Quaturn	317	–	GN8AFC
786-GN8FCABCP	Quaturn	317	–	GN8FC
786-GN8FCXKABCP	Ceramic	317	–	GN8FC
786-TWGN8FCABCP*	Quaturn	317	–	GN8FC
786-L9E29ABCP	Quaturn	317	E29	L9
786-L9E36ABCP	Quaturn	317	E36	L9
786-E3-319ABCP	Quaturn	319	E3	GN2A
786-E3-319XKABCP	Ceramic	319	E3	GN2A
786-E35-319ABCP	Quaturn	319	E35	GN2A
786-GN2FC319ABCP	Quaturn	319	–	GN2FC
786-GN8AE3-319ABCP	Quaturn	319	E3	GN8A
786-E3-369ABCP	Quaturn	369	E3	GN2A
786-E3-369XKABCP	Ceramic	369	E3	GN2A
786-E35-369ABCP	Quaturn	369	E35	GN2A
786-E3-369VPAABCP	Quaturn	369	E3VP	GN2A
786-GN2FC369ABCP	Quaturn	369		GN2FC
786-GN8AE3-369ABCP	Quaturn	369	E3	GN8A
786-GN8AE3V369AB	Quaturn	369	E3VP	GN8A
786-LESHAB	Quaturn	–	–	–
786-LESHXKAB	Ceramic	–	–	–
786-TWLESHAB*	Quaturn	–	–	–

*Includes third-water connection

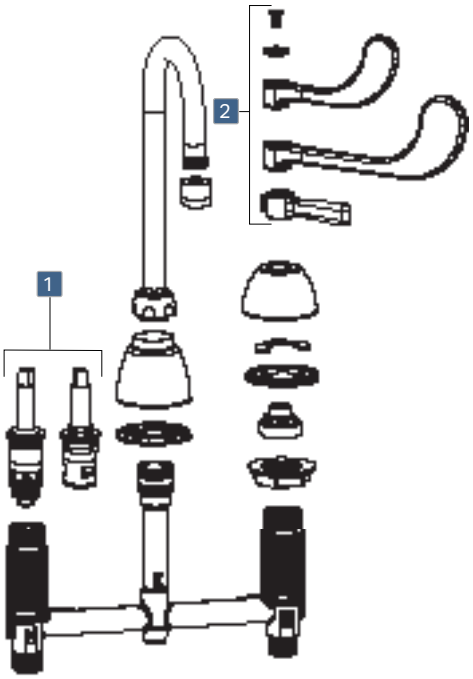

Cartridges

	Model	Description
1	**Quaturn™ Compression**	
	377-XTRH	Long stem, right
	377-XTLH	Long stem, left
	Quaturn™ w/ Control-A-Flow	
	377-X245R	Long stem, right
	377-X245L	Long stem, left
	Ceramic	
	377-XKRH	Long stem, right
	377-XKLH	Long stem, left

Handles

	Model	Description	
2	317	4" wristblade Vandal proof	
	319	6" elbow Vandal proof	
	369	2-3/8" lever Vandal proof	

Spouts

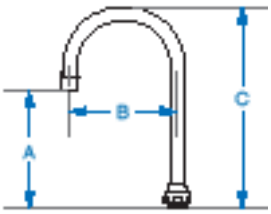

Model	A	B	C	Outlet
Gooseneck Rigid/Swing				
GN1A	5-7/8"	3-1/2"	8-3/8"	Male
GN2A	6-1/8"	5-1/4"	9-3/4"	Male
GN2B	5-3/4"	5-1/4"	9-3/4"	Female
GN8A	6"	8"	11-1/4"	Male
Gooseneck 1.5 GPM Laminar Insert				
GN1FC	5-7/8"	3-1/2"	8-3/8"	–
GN2AFC	6-1/8"	5-1/4"	9-3/4"	Male
GN2FC	6-1/8"	5-1/4"	9-3/4"	–
GN8AFC	6"	8"	11"	Male
GN8FC	6-1/8"	8"	11-1/4"	–

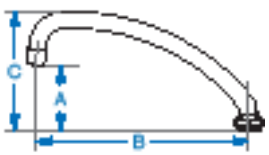

Model	A	B	C	Outlet
L-Type Rigid/Swing				
L9	3-3/4"	9-1/2"	6-1/2"	Male

Outlets

Model	Thread	GPM
Aerated Vandal Resistant		
E35VP	13/16" - 24 UNS Female	1.5
E3VP	13/16" - 24 UNS Female	2.2
Aerated Standard		
E35	13/16" - 24 UNS Female	1.5
E3	13/16" - 24 UNS Female	2.2
Non-Aerated Full Flow		
E1	13/16" - 24 UNS Female	Full
Non-Aerated Spray Vandal Resistant		
E2805-5	13/16" - 24 UNS Female	0.5
Laminar Vandal Resistant		
E29VP	13/16" - 24 UNS Female	2.2
Laminar Standard		
E29	13/16" - 24 UNS Female	2.2
Rose Spray		
E4	3/8" - 18 NPSM Male	1.5

CHICAGO FAUCETS.
Geberit Group

Deck-mounted manual sink faucet
Series: 802

- 4" centers
- 1/2" NPSM supply inlets and coupling nut for 3/8" or 1/2" flexible riser
- Vandal-resistant handles standard
- Ceramic or Quaturn™ compression cartridges
- Polished chrome finish

Model	Cartridge	Handle	Outlet
802-317ABCP	Quaturn	317	E12
802-317XKABCP	Ceramic	317	E12
802-V317ABCP	Quaturn	317	E12VP
802-V317XKABCP	Ceramic	317	E12VP
802-VE2805-317ABCP	Quaturn	317	E2805
802-ABCP	Quaturn	390	E12
802-XKABCP	Ceramic	390	E12
802-VABCP	Quaturn	390	E12VP
802-VXKABCP	Ceramic	390	E12VP
802-VE2805ABCP	Quaturn	390	E2805
802-1000ABCP	Quaturn	1000	E12
802-1000XKABCP	Ceramic	1000	E12
802-V1000ABCP	Quaturn	1000	E12VP
802-VE2805-1000AB	Quaturn	1000	E2805
802-LEHAB	Quaturn	–	E12
802-LEHXKAB	Ceramic	–	E12
802-VLEHAB	Quaturn	–	E12VP

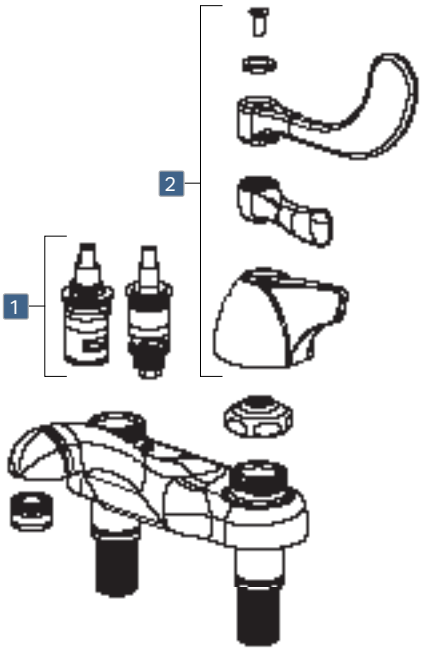

Cartridges

Model		Description
1	**Quaturn™ Compression**	
	1-099XT	Short stem, right
	1-100XT	Short stem, left
	Ceramic	
	1-099XK	Short stem, right
	1-100XK	Short stem, left

Handles

Model		Description	
2	317	4" wristblade Vandal proof	
	390	2-3/8" lever Vandal proof	
	1000	2" canopy Vandal proof	

Spouts

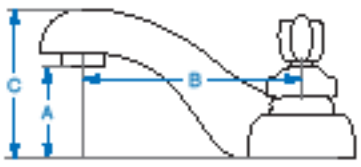

Model	A	B	C	Outlet
802	1-5/8"	4"	2-3/4"	Female

Outlets

Model	Thread	GPM
Aerated Vandal Resistant		
E12VP	13/16" - 27 UNS Male	2.2
Aerated Standard		
E12	13/16" - 27 UNS Male	2.2
Non-Aerated Spray Vandal Resistant		
E2805	13/16" - 27 UNS Male	0.5

CHICAGO FAUCETS®
Geberit Group

Wall-Mounted Service Sink Faucets

Wall-mounted service sink faucet

Series: 305, 886

- Adjustable arms with 3" - 8-3/8" centers
- Vandal-resistant lever handles standard
- 2-3/8" rigid or 5-3/4" swing spout with 3/4" hose thread and atmospheric vacuum breaker
- Ceramic or Quaturn™ compression cartridges
- Polished chrome or rough chrome finish

Polished Chrome

Model	Arm	Cartridge	Handle	Spout
305-VBCP	H	Quaturn	369	305-SVB
305-VBLEA	–	Quaturn	369	305-SVB
305-VBRCP	R*	Quaturn	369	305-SVB
305-VBRXKCP	R*	Ceramic	369	305-SVB
305-VBXKCP	H	Ceramic	369	305-SVB
886-CP	H	Quaturn	369	L5VB

Rough Chrome

Model	Arm	Cartridge	Handle	Spout
305-VBLEARCF	–	Quaturn	369	305-SVB
305-VBRCF	–	Quaturn	369	305-SVB
305-VBRRCF	R*	Quaturn	369	305-SVB
305-VBRXKRCF	R*	Ceramic	369	305-SVB
305-VBXKRCF	H	Ceramic	369	305-SVB

*With integral stops.

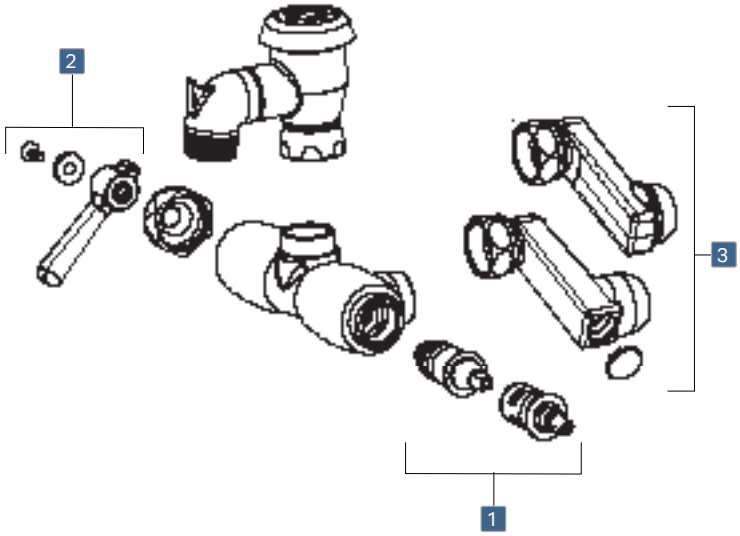

Cartridges

Model		Description
1	**Quaturn™ Compression**	
	1-099XT	Short stem, right
	1-100XT	Short stem, left
	Ceramic	
	1-099XK	Short stem, right
	1-100XK	Short stem, left

Handles

Model		Description	
2	369	2-3/8" lever Vandal proof	

Arms

Model		
3	H	2-1/2" offset
	R	2-1/2" offset with integral shutoff stop

Spouts

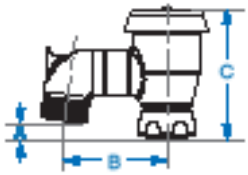

Model	A	B	C	Outlet Thread
Vacuum Breaker Spout				
305-SVB	1/2"	2-3/8"	3-1/8"	3/4" - 11-1/2 Male Hose
L5VB	1"	5-3/4"	4"	3/4" - 11-1/2 Male Hose

Wall-mounted service sink faucet

Series: 445

- Adjustable arms with 3" - 8-3/8" centers
- Vandal-resistant lever handles standard
- 5-3/4" rigid spout with 3/4" hose thread
- Ceramic cartridges with integral check valve
- Polished chrome finish

Model	Arm	Cartridge	Handle	Spout
445-897SRXKCCP	R*	Ceramic	369	897-S

*With integral stops.

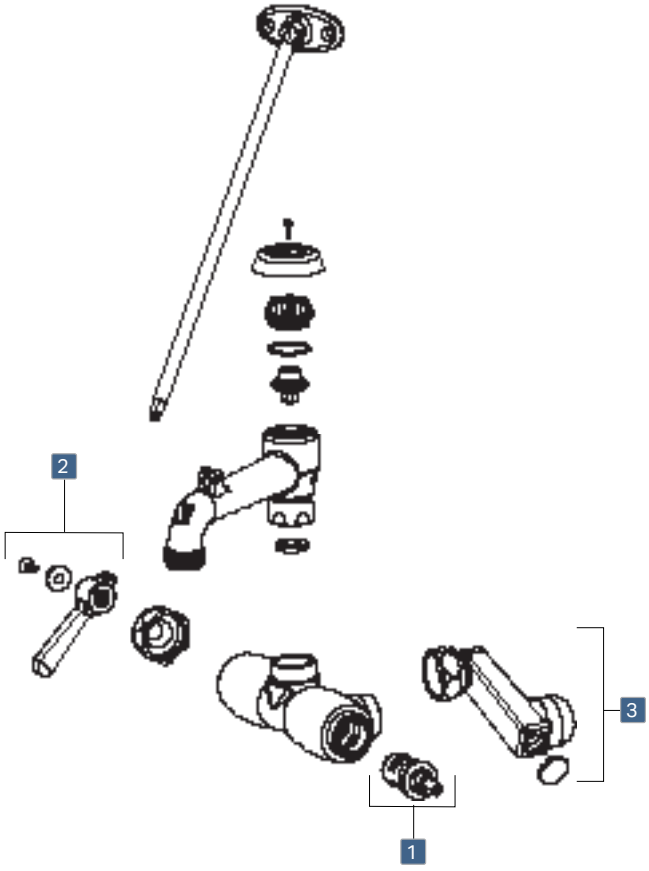

Cartridges

	Model	Description
1	**Ceramic With Integral Check**	
	1-099XKC	Short stem, right
	1-100XKC	Short stem, left

Handles

	Model	Description	
2	369	2-3/8" lever Vandal proof	

Arms

	Model	
3	R	2-1/2" offset with integral shutoff stop

Spouts

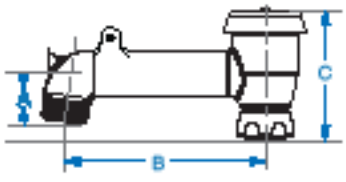

Model	A	B	C	Outlet Thread
Rigid Vacuum Breaker Spout with Pail Hook and Pipe Support				
897-S	1-3/8"	5-3/4"	3-1/8"	3/4" - 11-1/2 Male Hose

CHICAGO FAUCETS.
Geberit Group

Wall-mounted service sink faucet

Series: 540

- Fixed 8" centers or adjustable arms with 7-1/4" - 8-3/4" centers
- Vandal-resistant lever or wristblade handles standard
- 5-3/4" rigid spout with 3/4" hose thread
- Ceramic or Quaturn™ compression cartridges
- Polished chrome finish

Model	Arm	Cartridge	Handle	Spout
540-LD897SCP	G	Quaturn	369	897-S
540-LD897SWXF317CP	WXF	Quaturn	369	897-S
540-LD897SWXFXKCP	WXF	Ceramic	369	897-S

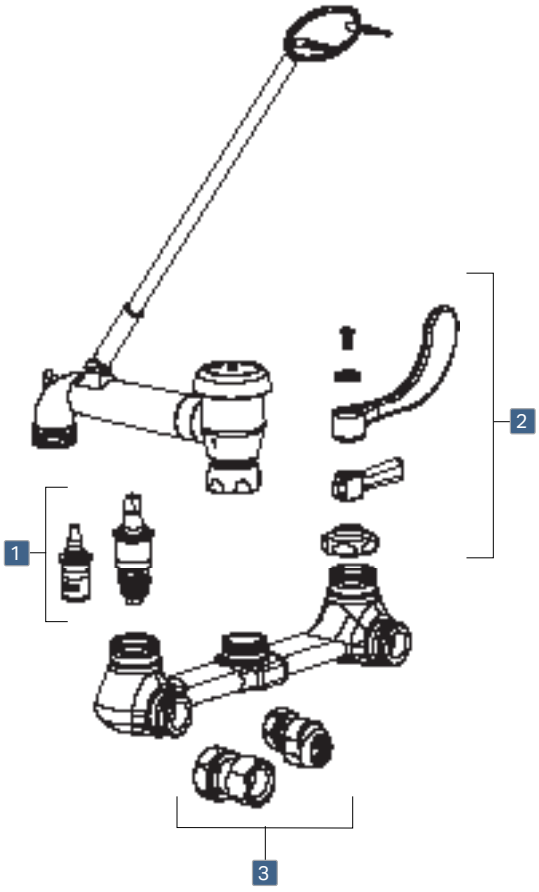

Cartridges

	Model	Description
1	**Quaturn™ Compression**	
	1-099XT	Short stem, right
	1-100XT	Short stem, left
	Ceramic	
	1-099XK	Short stem, right
	1-100XK	Short stem, left

Handles

	Model	Description	
2	317	4" wristblade Vandal proof	
	369	2-3/8" lever Vandal proof	

Arms

	Model	
3	G	3/8" offset
	WXF	Straight 2"

Spouts

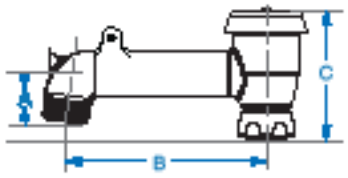

Model	A	B	C	Outlet Thread
Rigid Vacuum Breaker Spout with Pail Hook and Pipe Support				
897-S	1-3/8"	5-3/4"	3-1/8"	3/4" - 11-1/2 Male Hose

Wall-mounted service sink faucet

Series: 814, 815

- Adjustable arms with 3" - 8-3/8" centers
- Vandal-resistant elbow blade handles standard
- 5-3/4" rigid spout with 3/4" hose thread
- Quaturn™ compression cartridges
- Polished chrome finish

Model	Arm	Cartridge	Handle	Spout
814-VBCP	R	Quaturn	319	814-SVB
815-VBCP	R	Quaturn	319	815-SVB

Cartridges

	Model	Description
	Quaturn™ Compression	
1	1-099XT	Short stem, right
	1-100XT	Short stem, left

Handles

	Model	Description	
2	319	6" elbow blade Vandal proof	

Arms & Inlet Extensions

	Model	
3	R	2-1/2" offset with integral shutoff stop
	EX2	Straight 2" short supply inlet extension
	EX5	Straight 5" long supply inlet extension

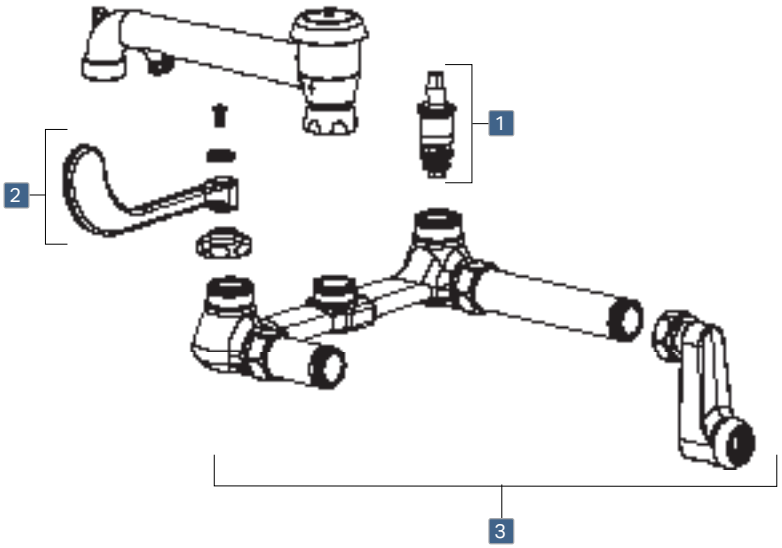

Spouts

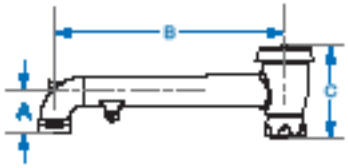

Model	A	B	C	Outlet Thread
Rigid Vacuum Breaker Spout with Pail Hook and Pipe Support				
814-SVB	1-3/8"	7-1/2"	3"	3/4" - 11-1/2 Male Hose
815-SVB	1-3/8"	7-1/2"	3"	3/4" - 11-1/2 Male Hose

CHICAGO FAUCETS.
Geberit Group

Wall-mounted service sink faucet

Series: 835

- 6″ fixed centers
- 3″ cross handles
- 5-3/4″ rigid spout with 3/4″ hose thread
- Supplies from above
- Quaturn™ compression cartridges
- Polished chrome or rough chrome finish

Model	Cartridge	Handle	Spout
835-CP	Quaturn	633	Integral
835-RCF*	Quaturn	633	Integral

*Rough chrome finish.

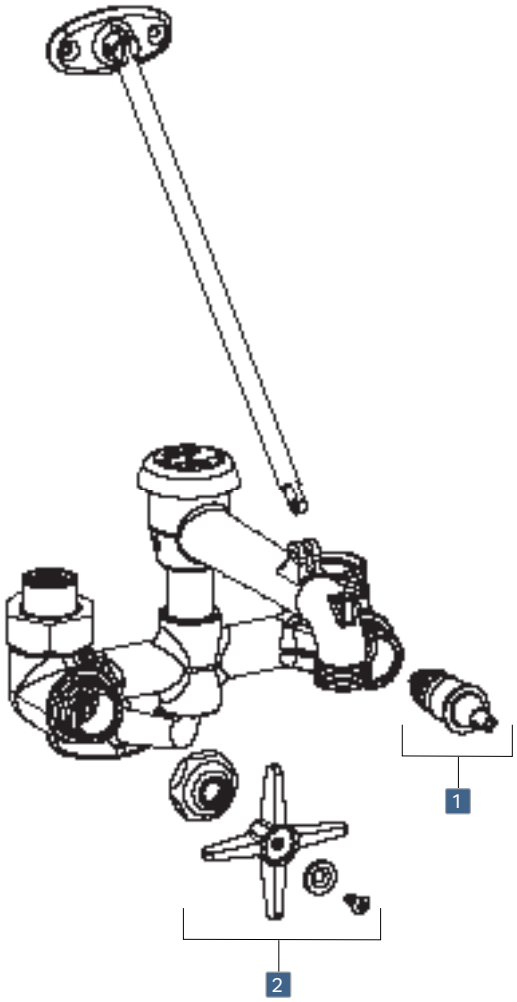

Cartridges

	Model	Description
1	**Quaturn™ Compression**	
	1-100XT	Short stem, left

Handles

	Model	Description	
2	633	3″ cross	

Wall-mounted service sink faucet

Series: 897

- Adjustable arms with 7-5/8" - 8-3/8" centers
- Integral stop valves
- Vandal-resistant lever handles standard
- 5-1/4" rigid atmospheric vacuum breaker spout with 3/4" hose thread
- Ceramic cartridges
- Polished chrome or rough chrome finish

Individual Faucets

Model	Arm	Cartridge	Handle	Spout
897-CCP*	897-012	Ceramic	369	Integral
897-CP	897-012	Ceramic	369	Integral
897-CRCF*†	897-012	Ceramic	369	Integral
897-RCF†	897-012	Ceramic	369	Integral

Master Packs With Eight Faucets

Model	Arm	Cartridge	Handle	Spout
897-MPCCP*	897-012	Ceramic	369	Integral
897-MPCP	897-012	Ceramic	369	Integral
897-MPCRCF*†	897-012	Ceramic	369	Integral
897-MPRCF†	897-012	Ceramic	369	Integral

*Includes integral check valves.
†Rough chrome finish.

Cartridges

	Model	Description
	Ceramic	
1	1-099XK	Short stem, right
	1-100XK	Short stem, left

Handles

	Model	Description	
2	369	2-3/8" lever Vandal proof	

Arms

	Model	
3	897-012	3/16 Offset

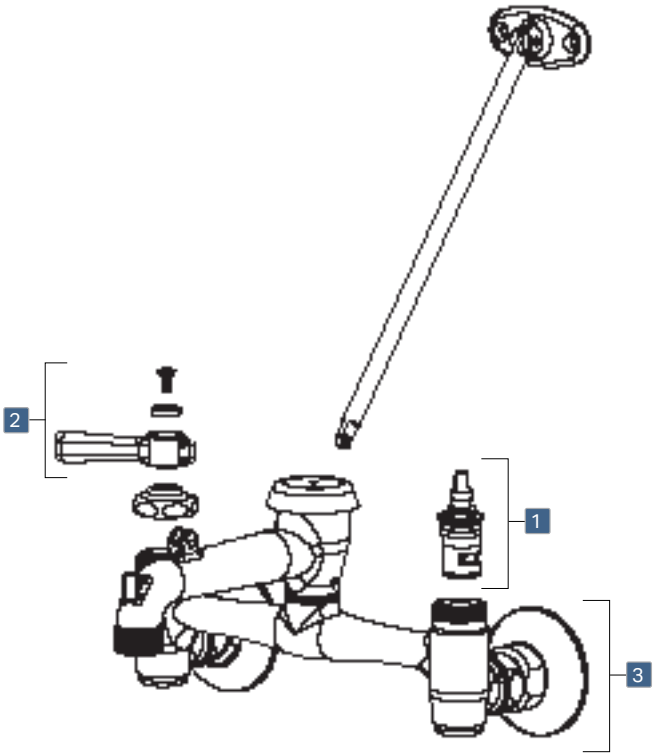

CHICAGO FAUCETS.
Geberit Group

Wall-mounted service sink faucet

Series: 911

- 8" fixed centers
- 3" cross handles
- 5-3/4" rigid spout with 3/4" hose thread
- Slow compression cartridges
- Polished chrome finish

Model	Cartridge	Handle	Spout
911-ISCP	Slow Compression	633	782-001K

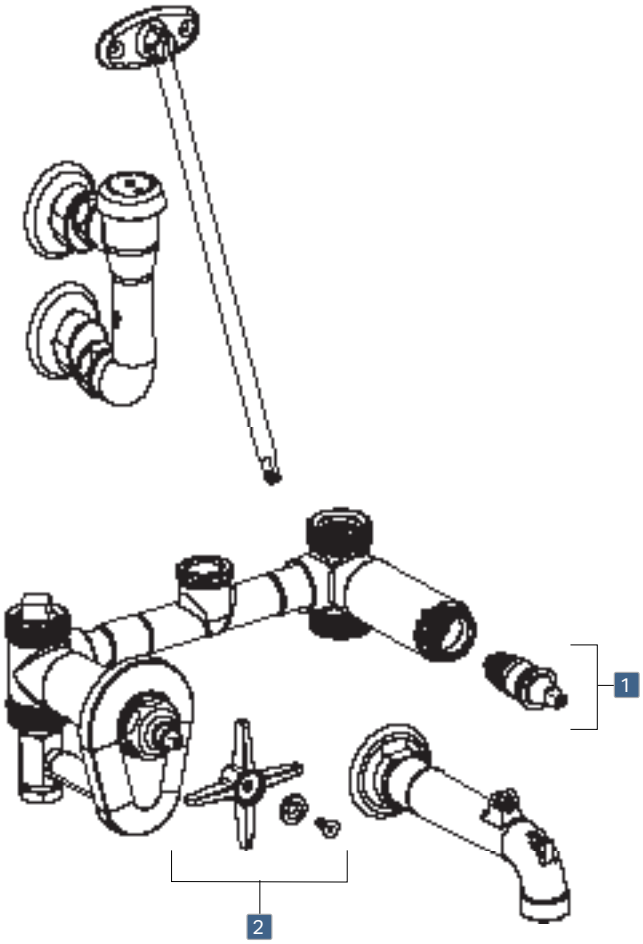

Cartridges

	Model	Description
1	**Slow Compression**	
	217-XTLH	Short stem, left

Handles

	Model	Description	
2	633	3" cross	

Spouts

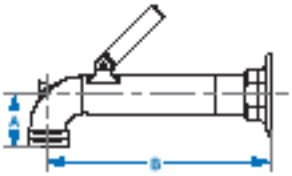

Model	A	B	C	Outlet Thread
Rigid Spout with Wall Flange and Pail Hook				
782-001K	1-3/8"	5-3/4"	n/a	3/4" - 11-1/2 Male Hose

CHICAGO FAUCETS®
Geberit Group

Wall-Mounted Two-Handle Manual Sink Faucets

Wall-mounted manual sink faucet

Series: 225

- 3" vertical fixed centers
- Vandal-resistant lever handles standard
- 3-1/2" center-to-center rigid spout
- Quaturn™ compression cartridges
- Polished chrome finish

Model	Arm	Cartridge	Handle	Outlet	Spout
225-ABCP	–	Quaturn	369	E4F	225-001
225-261ABCP	261	Quaturn	369	E4F	225-001
225-261E3-3XKABCP*	261	Quaturn	369	E3-3	225-001

*Not available with CF*Now!* shipping

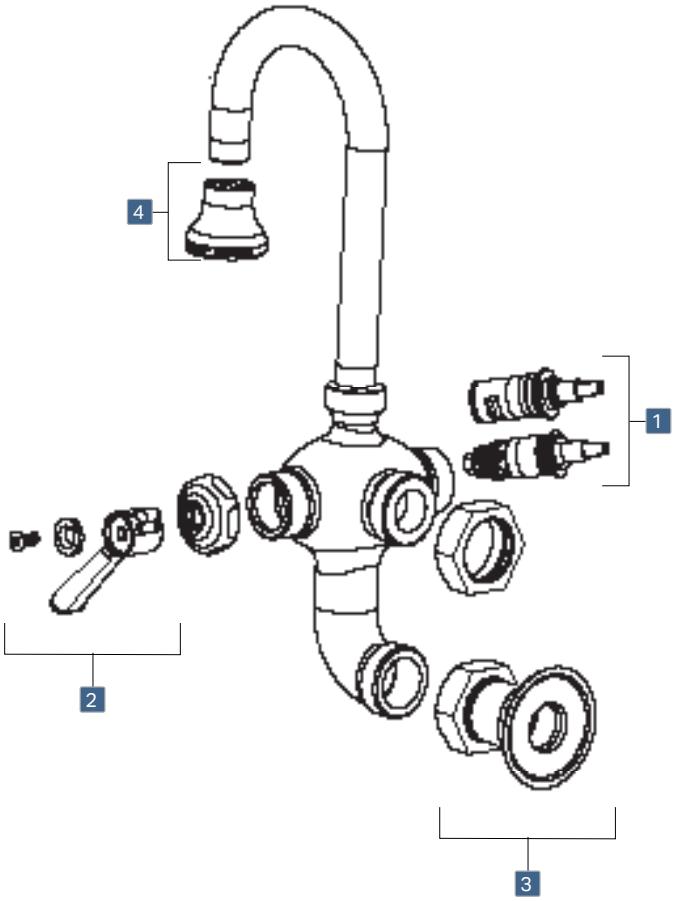

Cartridges

	Model	Description
1	**Quaturn™ Compression**	
	1-099XT	Short stem, right
	1-100XT	Short stem, left
	Ceramic	
	1-099XK	Short stem, right
	1-100XK	Short stem, left

Handles

	Model	Description	
2	369	2-3/8" lever Vandal proof	

Arms

	Model	
3	261	Straight inlet arm

Outlets

	Model	Description	
4	E4F	3/8" - 18 NPSM Female	1.5
	E3-3	3/8" - 18 NPSM Female	2.2

Wall-mounted manual sink faucet

Series: 305

- Adjustable arms with 3" - 8-3/8" centers
- Integral spout with 3/4" hose thread
- Vandal-resistant lever handles standard
- Quaturn™ compression cartridges
- Rough chrome finish

Model	Arm	Cartridge	Handle	Spout
305-RCF	H	Quaturn	369	Integral
305-RRCF*	R	Quaturn	369	Integral

*With integral stops.

Cartridges

Model		Description
1	**Quaturn™ Compression**	
	1-099XT	Short stem, right
	1-100XT	Short stem, left

Handles

Model		Description	
2	369	2-3/8" lever Vandal proof	

Arms

Model		
3	H	2-1/2" offset
	R	2-1/2" offset with integral shutoff stop

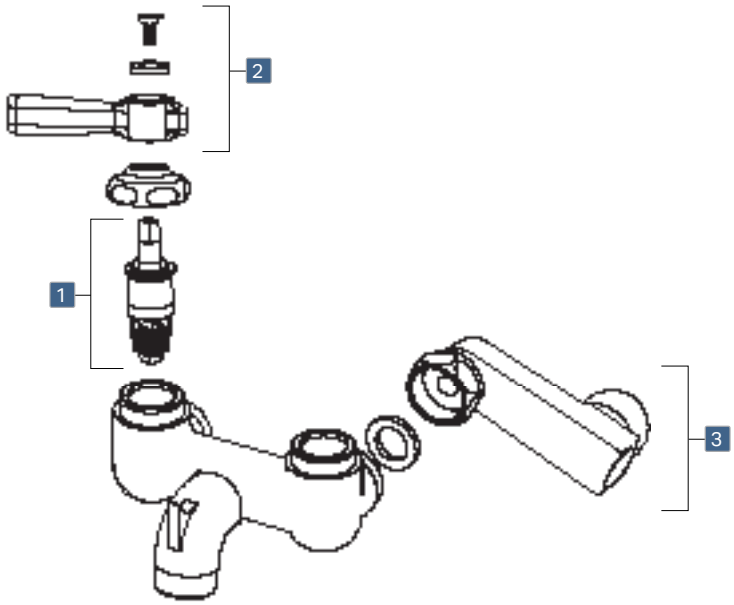

CHICAGO FAUCETS.
Geberit Group

Wall-mounted manual sink faucet

Series: 445

- Adjustable arms with 3" - 8-3/8" centers
- Vandal-resistant lever handles standard
- Ceramic or Quaturn™ compression cartridges
- Polished chrome finish

Model	Arm	Cartridge	Handle	Outlet	Spout
445-ABCP	H	Quaturn	369	E3	S6
445-DJ13ABCP	H	Quaturn	369	E3	DJ13
445-DJ13E1ABCP	H	Quaturn	369	E1	DJ13
445-DJ13E35ABCP	H	Quaturn	369	E35	DJ13
445-DJ13XKABCP	H	Ceramic	369	E3	DJ13
445-DJ18ABCP	H	Quaturn	369	E3	DJ18
445-DJ18E1ABCP	H	Quaturn	369	E1	DJ18
445-DJ18E35ABCP	H	Quaturn	369	E35	DJ18
445-DJ18XKABCP	H	Ceramic	369	E3	DJ18
445-E1ABCP	H	Quaturn	369	E1	S6
445-E35ABCP	H	Quaturn	369	E35	S6
445-GN2AE3ABCP	H	Quaturn	369	E3	GN2A
445-GN8AE3RABCP*	R	Quaturn	369	E3	GN8A
445-L12ABCP	H	Quaturn	369	E3	L12
445-L12E1ABCP	H	Quaturn	369	E1	L12
445-L12E35ABCP	H	Quaturn	369	E35	L12
445-L12RABCP*	R	Quaturn	369	E3	L12

Model	Arm	Cartridge	Handle	Outlet	Spout
445-L12XKABCP	H	Ceramic	369	E3	L12
445-L8ABCP	H	Quaturn	369	E3	L8
445-L8E1ABCP	H	Quaturn	369	E1	L8
445-L8E35ABCP	H	Quaturn	369	E35	L8
445-L8RABCP*	R	Quaturn	369	E3	L8
445-L8XKABCP	H	Ceramic	369	E3	L8
445-L9ABCP	H	Quaturn	369	E3	L9
445-L9E1ABCP	H	Quaturn	369	E1	L9
445-L9E35ABCP	H	Quaturn	369	E35	L9
445-L9RABCP*	R	Quaturn	369	E3	L9
445-LESAAB	–	Quaturn	369	–	–
445-LESAB	H	Quaturn	369	–	–
445-LESHAB	H	Quaturn	–	–	–
445-LESXKAB	H	Ceramic	369	–	–
445-RABCP*	R	Quaturn	369	E3	S6
445-XKABCP	H	Ceramic	369	E3	S6

*With integral stops.

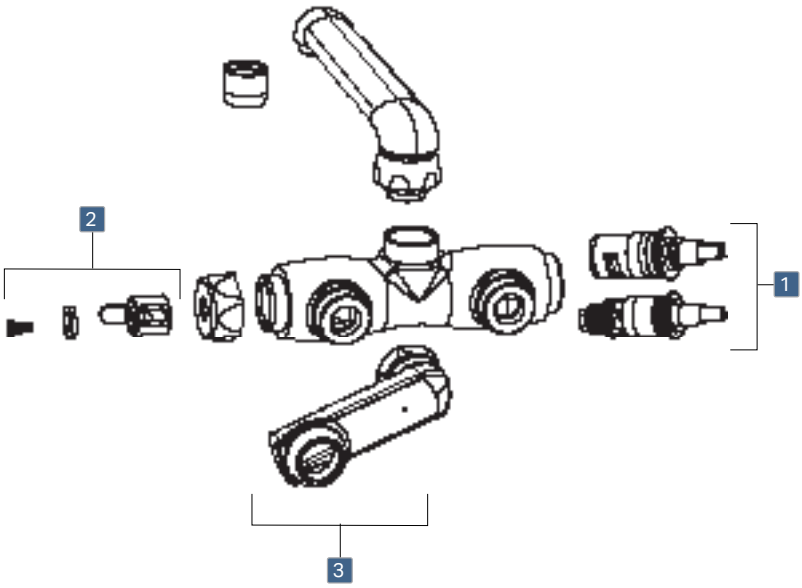

Cartridges

	Model	Description
1	**Quaturn™ Compression**	
	1-099XT	Short stem, right
	1-100XT	Short stem, left
	Ceramic	
	1-099XK	Short stem, right
	1-100XK	Short stem, left

Handles

	Model	Description	
2	369	2-3/8" lever Vandal proof	

Arms

	Model	
3	H	2-1/2" offset
	R	2-1/2" offset with integral shutoff stop

Spouts

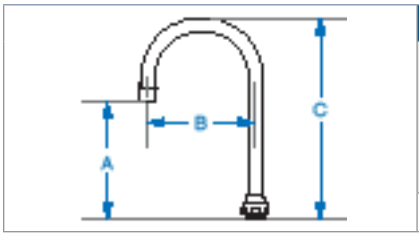

Model	A	B	C	Outlet
Gooseneck Rigid/Swing				
GN2A	6-1/8"	5-1/4"	9-3/4"	Male

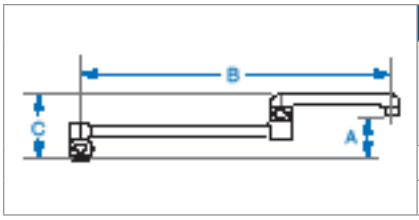

Model	A	B	C	Outlet
Double-Jointed Rigid/Swing				
DJ13	2-1/4"	13"	3-7/8"	Male
DJ18	2-1/4"	17-3/4"	3-7/8"	Male

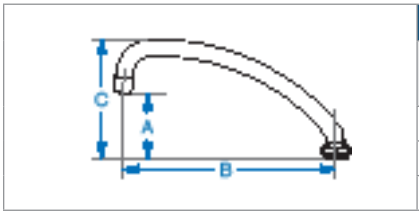

Model	A	B	C	Outlet
L-Type Rigid/Swing				
L8	2-7/8"	8"	4-3/8"	Male
L9	3-3/4"	9-1/2"	6-1/2"	Male
L12	2-3/8"	12"	4-5/8"	Male

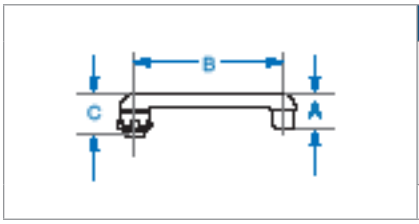

Model	A	B	C	Outlet
S-Type Swing				
S6	1-3/8"	6"	1-5/8"	Male

Outlets

Model	Thread	GPM
Aerated Standard		
E35	13/16" - 24 UNS Female	1.5
E3	13/16" - 24 UNS Female	2.2
Non-Aerated Full Flow		
E1	13/16" - 24 UNS Female	Full

CHICAGO FAUCETS.
Geberit Group

Wall-mounted manual sink faucet

Series: 521

- 4" fixed centers
- Vandal-resistant lever handles standard
- Quaturn™ compression cartridges
- Polished chrome finish

Model	Cartridge	Handle	Outlet	Spout
521-ABCP	Quaturn	369	E1	DB6A
521-GN2AE1ABCP	Quaturn	369	E1	GN2A

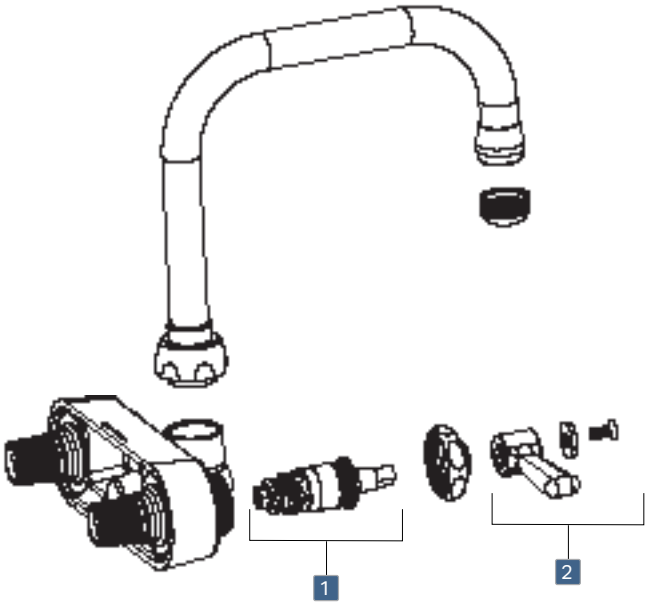

Cartridges

	Model	Description
	Quaturn™ Compression	
1	1-099XT	Short stem, right
	1-100XT	Short stem, left

Handles

	Model	Description	
2	369	2-3/8" lever Vandal proof	

Spouts

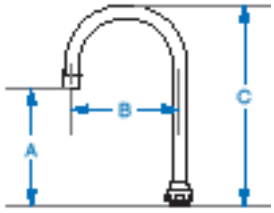

Model	A	B	C	Outlet
Gooseneck Rigid/Swing				
GN2A	6-1/8"	5-1/4"	9-3/4"	Male

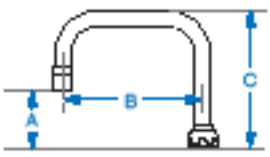

Model	A	B	C	Outlet
Double-Bend Rigid/Swing				
DB6A	3-1/8"	6-1/4"	6-3/8"	Male

Outlets

Model	Thread	GPM
Non-Aerated Full Flow		
E1	13/16" - 24 UNS Female	Full

CHICAGO FAUCETS.
Geberit Group

Wall-mounted manual sink faucet

Series: 540, 631

- 8" fixed centers or adjustable arms
- Vandal-resistant lever or wristblade handles standard
- Ceramic or Quaturn™ compression cartridges
- Polished chrome finish

3" - 13" Adjustable Centers

Model	Arm	Cartridge	Handle	Outlet	Spout
540-LDRLESXKAB	R	Ceramic	369	–	–
631-RABCP	R	Quaturn	317	E3	GN1A
631-RE29VPXKABCP	R	Ceramic	317	E29VP	GN1A
631-RGN2AE3ABCP	R	Quaturn	317	E3	GN2A
631-RGN2FCABCP	R	Quaturn	317	–	GN2FC
631-RXKABCP	R	Ceramic	317	E3	GN1A

8" Fixed Centers

Model	Arm	Cartridge	Handle	Outlet	Spout
540-LD317WXFABCP	WXF	Quaturn	317	E3	S6
540-LD897SWXFABCP	WXF	Quaturn	369	–	897-S
540-LDL12E1WXFABCP	WXF	Quaturn	369	E1	L12
540-LDL12WXFABCP	WXF	Quaturn	369	E3	L12
540-LDLESAAB	–	Quaturn	369	–	–
540-LDWXFABCP	WXF	Quaturn	369	E3	S6
631-L12WXFABCP	WXF	Quaturn	317	E3	L12

7-1/4" - 8-3/4" Adjustable Centers

Model	Arm	Cartridge	Handle	Outlet	Spout
540-LD317ABCP	G	Quaturn	317	E3	S6
540-LDABCP	G	Quaturn	369	E3	S6
540-LDDJ13ABCP	G	Quaturn	369	E3	DJ13
540-LDDJ18ABCP	G	Quaturn	369	E3	DJ18
540-LDE1ABCP	G	Quaturn	369	E1	S6
540-LDE2805-5ABCP	G	Quaturn	369	E2805-5	S6
540-LDE29ABCP	G	Quaturn	369	E29	S6
540-LDE35ABCP	G	Quaturn	369	E35	S6
540-LDGN1AE3ABCP	G	Quaturn	369	E3	GN1A
540-LDGN2AE3ABCP	G	Quaturn	369	E3	GN2A
540-LDGN8AE3ABCP	G	Quaturn	369	E3	GN8A
540-LDL12ABCP	G	Quaturn	369	E3	L12
540-LDL12E1ABCP	G	Quaturn	369	E1	L12
540-LDL12E35ABCP	G	Quaturn	369	E35	L12
540-LDL12XKABCP	G	Ceramic	369	E3	L12
540-LDL8ABCP	G	Quaturn	369	E3	L8
540-LDL8E1ABCP	G	Quaturn	369	E1	L8
540-LDL8E35ABCP	G	Quaturn	369	E35	L8
540-LDL8XKABCP	G	Ceramic	369	E3	L8
540-LDL9ABCP	G	Quaturn	369	E3	L9
540-LDL9E1ABCP	G	Quaturn	369	E1	L9
540-LDL9E35ABCP	G	Quaturn	369	E35	L9
540-LDL9XKABCP	G	Ceramic	369	E3	L9
540-LDLESAB	H	Quaturn	369	–	–
540-LDLESHAB	H	Quaturn	–	–	–
540-LDLESXKAB	H	Ceramic	369	–	–
540-LDXKABCP	G	Ceramic	369	E3	S6
631-ABCP	G	Quaturn	317	E3	GN1A
631-E29ABCP	G	Quaturn	317	E29	GN1A
631-E35ABCP	G	Quaturn	317	E35	GN1A
631-GN1AE1ABCP	G	Quaturn	317	E1	GN1A
631-GN2AE3ABCP	G	Quaturn	317	E3	GN2A
631-GN2AFCABCP	G	Quaturn	317	–	GN2AFC
631-GN2FCABCP	G	Quaturn	317	–	GN2FC
631-GN8AE3ABCP	G	Quaturn	317	E3	GN8A
631-L12ABCP	G	Quaturn	317	E3	L12
631-L9ABCP	G	Quaturn	317	E3	L9
631-LESAB	G	Quaturn	317	–	–
631-XKABCP	G	Ceramic	317	E3	GN1A

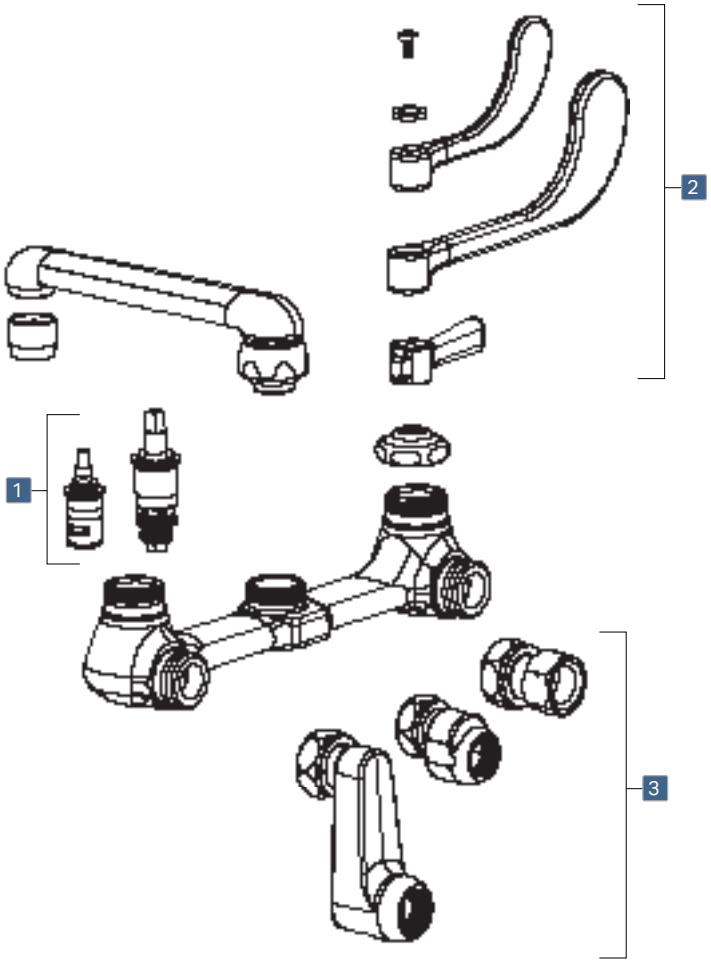

Cartridges

	Model	Description
1	**Quaturn™ Compression**	
	1-099XT	Short stem, right
	1-100XT	Short stem, left
	Ceramic	
	1-099XK	Short stem, right
	1-100XK	Short stem, left

Handles

	Model	Description	
2	317	4" wristblade Vandal proof	
	319	6" elbow blade Vandal proof	
	369	2-3/8" lever Vandal proof	

Arms

	Model	
3	G	3/8" offset
	H	2-1/2" offset
	R	2-1/2" offset with integral shutoff stop
	WXF	Straight 2"

Spouts

Model	A	B	C	Outlet
Double-Jointed Rigid/Swing				
DJ13	2-1/4"	13"	3-7/8"	Male
DJ18	2-1/4"	17-3/4"	3-7/8"	Male

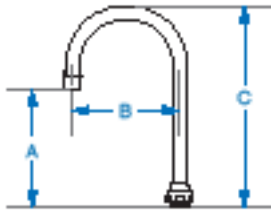

Model	A	B	C	Outlet
Gooseneck Rigid/Swing				
GN1A	5-7/8"	3-1/2"	8-3/8"	Male
GN2A	6-1/8"	5-1/4"	9-3/4"	Male
GN8A	6"	8"	11-1/4"	Male
Gooseneck 1.5 GPM Laminar Insert				
GN2AFC	6-1/8"	5-1/4"	9-3/4"	Male
GN2FC	6-1/8"	5-1/4"	9-3/4"	Plain

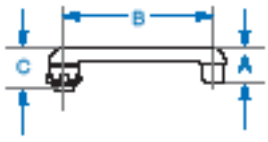

Model	A	B	C	Outlet
S-Type Swing				
S6	1-3/8"	6"	1-5/8"	Male

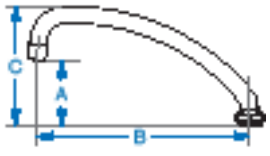

Model	A	B	C	Outlet
L-Type Rigid/Swing				
L8	2-7/8"	8"	4-3/8"	Male
L9	3-3/4"	9-1/2"	6-1/2"	Male
L12	2-3/8"	12"	4-5/8"	Male

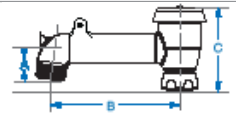

Model	A	B	C
Vacuum Breaker Rigid w/ Pail Hook and Pipe Support			
897-S	1-3/8"	5-3/4"	3-1/8"

Outlets

Model	Thread	GPM
Aerated Standard		
E35	13/16" - 24 UNS Female	1.5
E3	13/16" - 24 UNS Female	2.2
Non-Aerated Full Flow		
E1	13/16" - 24 UNS Female	Full
Non-Aerated Spray Vandal Resistant		
E2805-5	13/16" - 24 UNS Female	0.5
Laminar Vandal Resistant		
E29VP	13/16" - 24 UNS Female	2.2
Laminar Standard		
E29	13/16" - 24 UNS Female	2.2

CHICAGO FAUCETS.
Geberit Group

Wall-mounted manual sink faucet

Series: 640

- Adjustable arms with 6-1/4" - 9-3/4" centers
- Integral supply stops
- Vandal-resistant lever handles standard
- Ceramic cartridges
- Polished chrome finish

Model	Cartridge	Handle	Outlet	Spout
640-GN1AE35-369YAB	Ceramic	369	E35	GN1A
640-L12E35-369YAB	Ceramic	369	E35	L12
640-L8E35-369YAB	Ceramic	369	E35	L8

Model	Cartridge	Handle	Outlet	Spout
640-L9E35-369YAB	Ceramic	369	E35	L9
640-LES369YAB	Ceramic	369	–	–
640-S6E35-369YAB	Ceramic	369	E35	S6

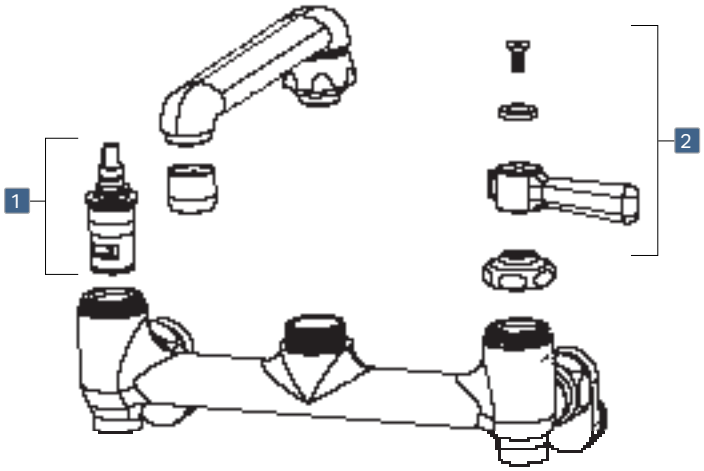

Cartridges

	Model	Description
	Ceramic	
1	1-099XK	Short stem, right
	1-100XK	Short stem, left

Handles

	Model	Description	
2	369	2-3/8" lever Vandal proof	

Spouts

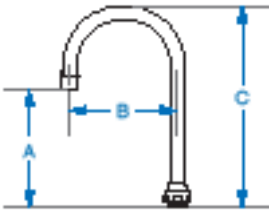

Model	A	B	C	Outlet
Gooseneck Rigid/Swing				
GN1A	5-7/8"	3-1/2"	8-3/8"	Male

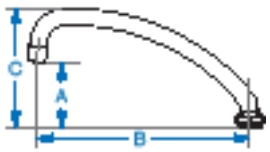

Model	A	B	C	Outlet
L-Type Rigid/Swing				
L8	2-7/8"	8"	4-3/8"	Male
L9	3-3/4"	9-1/2"	6-1/2"	Male
L12	2-3/8"	12"	4-5/8"	Male

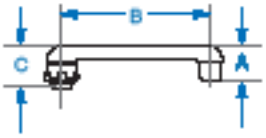

Model	A	B	C	Outlet
S-Type Swing				
S6	1-3/8"	6"	1-5/8"	Male

Outlets

Model	Thread	GPM
Aerated Standard		
E35	13/16" - 24 UNS Female	1.5

CHICAGO FAUCETS.
Geberit Group

Wall-mounted manual sink faucet
Series: 737

- Adjustable arms with 3" - 8-3/8" centers
- Vandal-resistant lever handles standard
- 6" swing spout with 3/4" hose thread
- Quaturn™ compression cartridges or ceramic cartridges
- Rough chrome finish

Model	Arm	Cartridge	Handle	Outlet	Spout
737-RCF	H	Quaturn	369	E2	S6
737-LESHRCF	H	Quaturn	–	–	–
737-RCF*	H	Ceramic	369	E2	S6

*Not available with CF*Now!* shipping

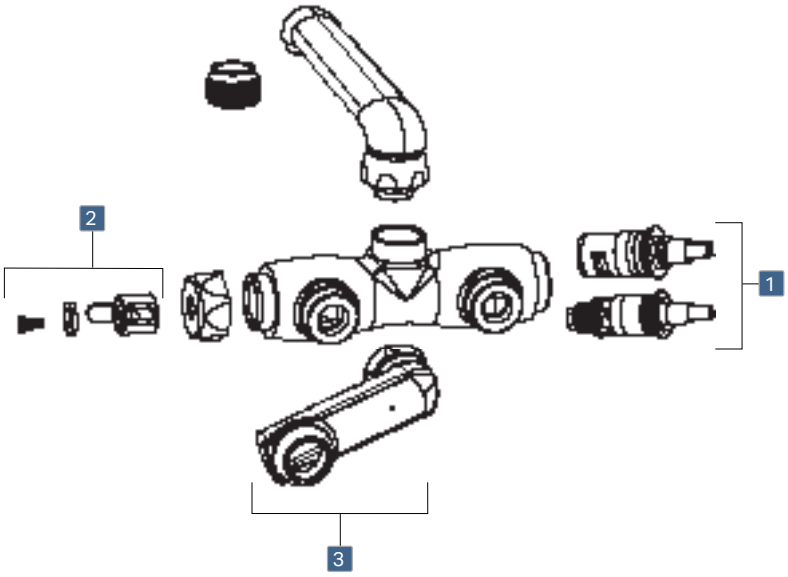

Cartridges

	Model	Description
1	**Quaturn™ Compression**	
	1-099XT	Short stem, right
	1-100XT	Short stem, left
	Ceramic With Integrated Check Valve	
	1-099XKC	Short stem, right
	1-100XKC	Short stem, left

Handles

	Model	Description	
2	369	2-3/8" lever Vandal proof	

Arms

	Model	
3	H	2-1/2" offset

Spouts

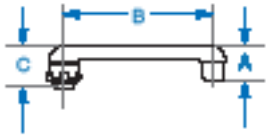

Model	A	B	C	Outlet
S-Type Swing				
S6	1-3/8"	6"	1-5/8"	Male

Outlets

Model	Thread	GPM
Hose Thread 3/4" Male Outlet		
E2	13/16" - 24 UNS Female	Full

CHICAGO FAUCETS®
Geberit Group

Remote Valves and Spouts

Foot operated remote valve

Series: 625, 628

- NAIAD metering cartridge with choice of fast or adjustable cycle time closure
- 1/2" NPT female thread inlets
- 3/8" NPT or 1/2" NPT female thread outlet
- Polished chrome finish

Model	Cycle Time	Pedal	Supply
625-ABCP	Fast	Short	Dual
625-LPABCP	Fast	Long	Dual
625-LPSLOABCP	Adjustable	Long	Dual
625-SLOABCP	Adjustable	Short	Dual
628-ABCP	Fast	Short	Single

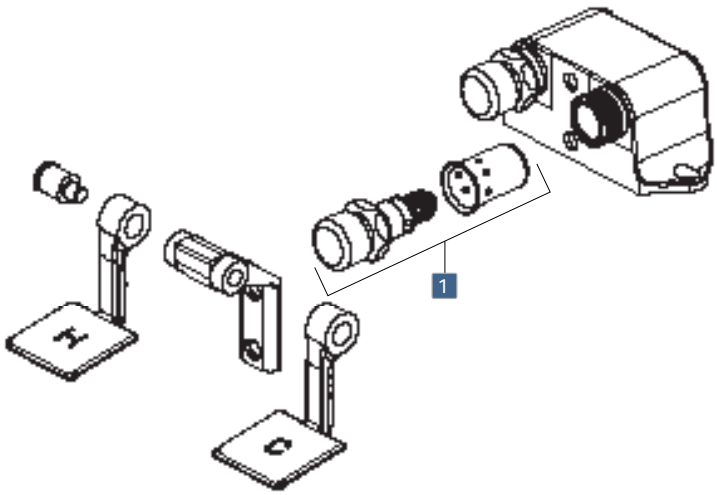

Cartridges

	Model	Description
	NAIAD Metering	
1	628-X	Fast cycle time closure
	628-XSLO	Adjustable cycle time closure

Foot operated remote valve

Series: 806, 834

- NAIAD metering cartridge with choice of fast or adjustable cycle time closure
- 1/2" NPT female thread inlets and 3/8" NPT or 1/2" NPT Outlets
- Supply stops with slow compression cartridges
- Locking feature to keep pedals in a raised position
- Polished chrome finish

Model	Cycle Time	Pedal	Supply
806-ABCP	Fast	Long	Single
834-EPABCP	Fast	Long	Dual
834-EPSLOABCP	Adjustable	Long	Dual

Pedal Cartridges

	Model	Description
1	**NAIAD Metering**	
	625-X	Fast cycle time closure
	625-XSLO	Adjustable cycle time closure

Stop Cartridges

	Model	Description
2	**Slow Compression**	
	217-XTLH	Left hand

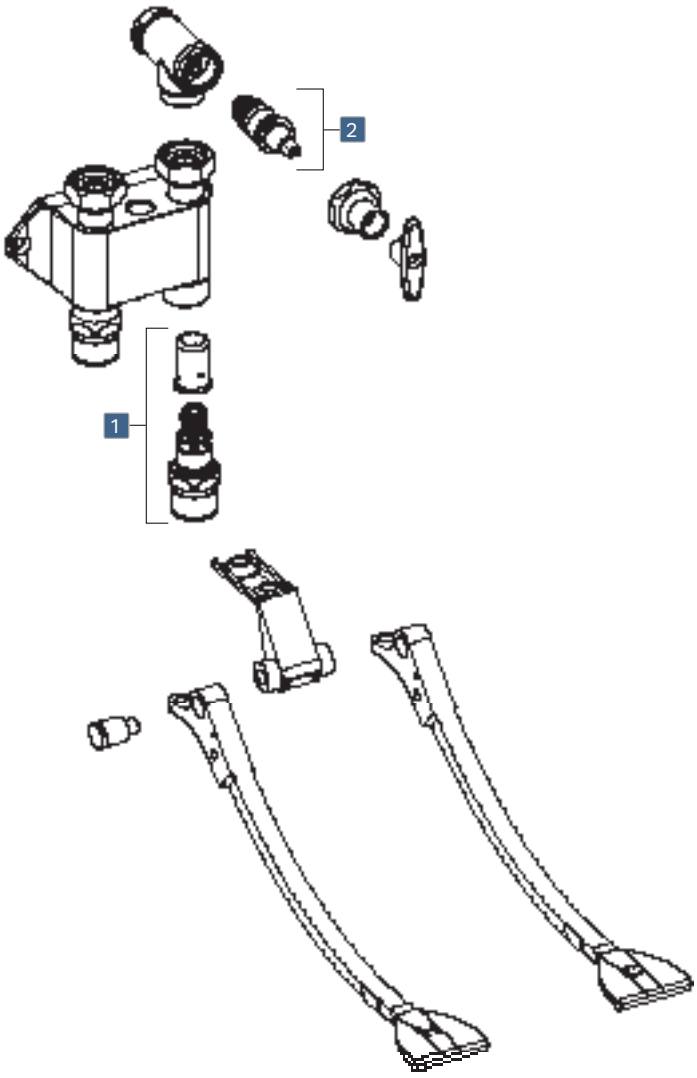

CHICAGO FAUCETS.
Geberit Group

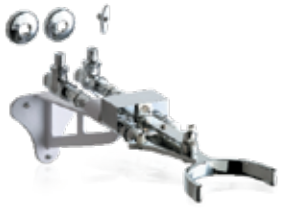

Knee operated remote valve

Series: 745

- Cam type cartridge with fast cycle time closure
- 1/2" NPT female thread inlets
- 3/8" NPT female thread outlet
- Supply stops with slow compression cartridges
- Polished chrome finish

Model	Cycle Time	Supply
745-VOABCP	Fast	Dual

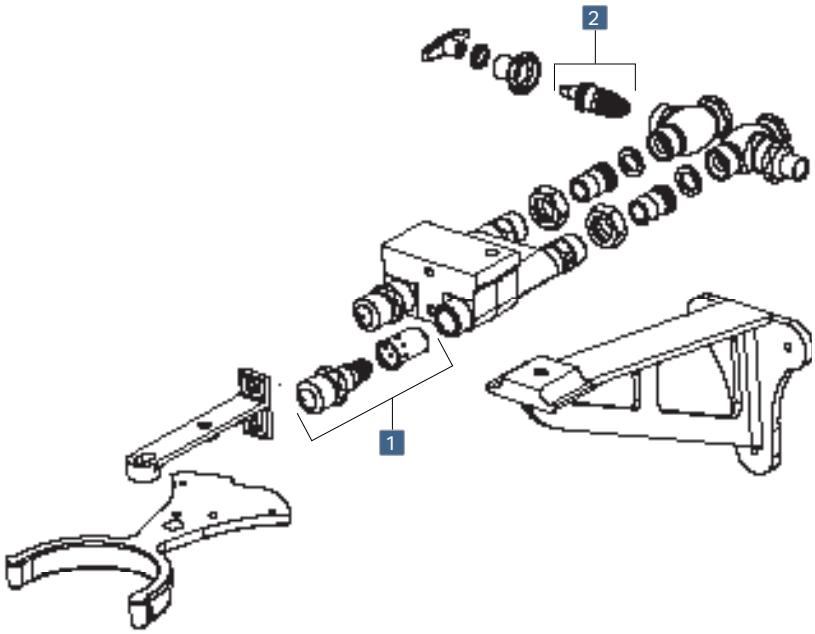

Pedal Cartridges

	Model	Description
1	**Cam Type**	
	745-X	Fast cycle time closure

Stop Cartridges

	Model	Description
2	**Slow Compression**	
	217-XTLH	Left hand

Straight or angle remote valve

Series: 770, 1771

- Slow compression or metering cartridge
- 1/2" NPT female thread inlets and outlets
- Push metering handle or vandal proof 2-1/4" tee handle
- Polished chrome finish

Model	Cartridge
770-665PSHCP	667-080K
1771-ABCP	217-XTLH
1771-CABCP	376-CX

Cartridges

	Model	Description
1	**Metering**	
	667-080K	Actuator Assembly, Valve
	Compression	
	217-XTLH	Left hand
	376-CX	With integral check

Handles

	Model	Description	
2	665	1-3/4" MVP metering push handle	
	293-006	2-1/4" tee handle	

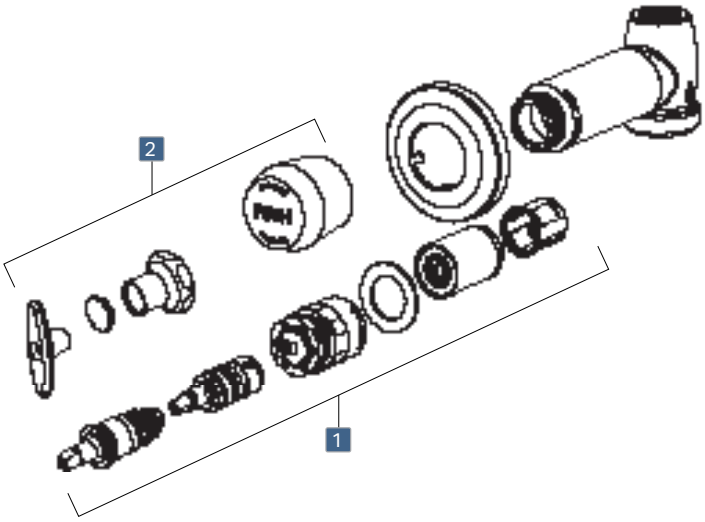

Remote spout

Series: 626, 629

- Single hole
- Choice of wall or deck mount
- Gooseneck design
- Available with laminar flow control spout insert
- Polished chrome finish

Model	Mount	Outlet	Spout
626-ABCP	Deck	–	GN2
626-E3ABCP	Deck	E3	GN2A
626-FCABCP	Deck	–	GN2FC
626-GN8FCABCP	Deck	–	GN8FC
629-E3ABCP	Wall	E3	GN1A

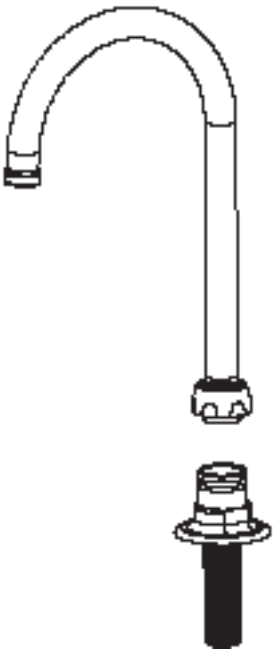

Spouts

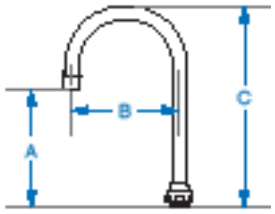

Model	A	B	C	Outlet
Gooseneck Rigid/Swing				
GN1A	5-7/8"	3-1/2"	8-3/8"	Male
GN2	5-5/8"	5-1/4"	9-3/4"	Plain
GN2A	6-1/8"	5-1/4"	9-3/4"	Male
Gooseneck 1.5 GPM Laminar Insert				
GN2FC	6-1/8"	5-1/4"	9-3/4"	Plain
GN8FC	6-1/8"	8"	11-1/4"	Plain

Outlets

Model	Thread	GPM
Aerated Standard		
E3	13/16" - 24 UNS Female	2.2

CHICAGO FAUCETS®
Geberit Group

Food Service Workboard, Pre-Rinse, Fillers, and Drains

Deck-mounted workboard faucets

Series: W4D, W8D

- 1/2" NPSM supply inlets
- Choice of 4" or 8" centers
- Vandal-resistant lever or wristblade handles standard
- Ceramic cartridges
- Polished chrome finish

8" Centers

Model	Cartridge	Handle	Outlet	Spout
W8D-LES317AB	Ceramic	317	–	–
W8D-LES369AB	Ceramic	369	–	–

4" Centers

Model	Cartridge	Handle	Outlet	Spout
W4D-GN2AE1-317ABCP	Ceramic	317	E1	GN2A
W4D-GN2AE1-369ABCP	Ceramic	369	E1	GN2A
W4D-L9E1-317ABCP	Ceramic	317	E1	L9
W4D-L9E1-369AB	Ceramic	369	E1	L9
W4D-L9E35-317ABCP	Ceramic	317	E35	L9
W4D-L9E35-369AB	Ceramic	369	E35	L9
W4D-LES317AB	Ceramic	317	–	–
W4D-LES369AB	Ceramic	369	–	–

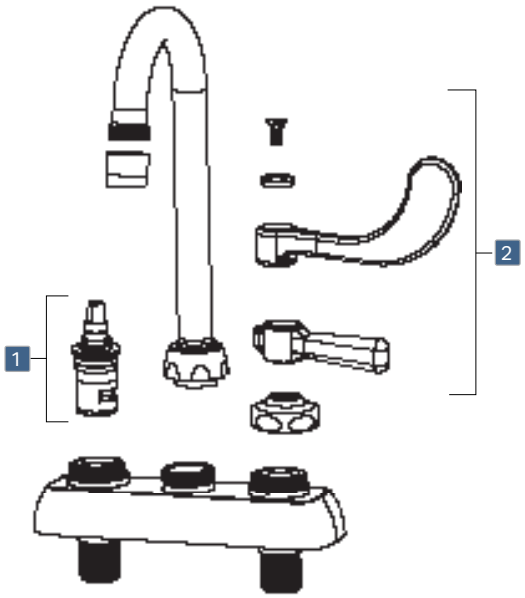

Cartridges

Model		Description
	Ceramic	
1	1-099XK	Short stem, right
	1-100XK	Short stem, left

Handles

Model		Description	
2	317	4" wristblade Vandal proof	
	369	2-3/8" lever Vandal proof	

Spouts

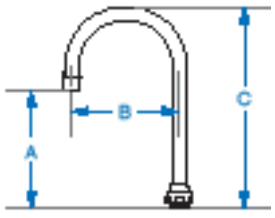

Model	A	B	C	Outlet
Gooseneck Rigid/Swing				
GN2A	6-1/8"	5-1/4"	9-3/4"	Male

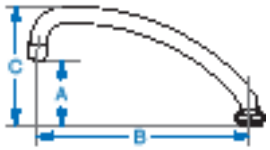

Model	A	B	C	Outlet
L-Type Rigid/Swing				
L9	3-3/4"	9-1/2"	6-1/2"	Male

Outlets

Model	Thread	GPM
Non-Aerated Full Flow		
E1	13/16" - 24 UNS Female	Full
Aerated Standard		
E35	13/16" - 24 UNS Female	1.5

Wall-mounted workboard faucets

Series: W4W, W8W

- 1/2" NPSM supply inlets
- Choice of 4" or 8" centers
- Vandal-resistant lever or wristblade handles standard
- Ceramic cartridges
- Polished chrome finish

4" Centers

Model	Cartridge	Handle	Outlet	Spout
W4W-G2E35-369AB	Ceramic	369	E35	GN2A
W4W-GN2AE1-369AB	Ceramic	369	E1	GN2A
W4W-L9E1-317AB	Ceramic	317	E1	L9
W4W-L9E1-369AB	Ceramic	369	E1	L9
W4W-L9E35-317AB	Ceramic	317	E35	L9
W4W-L9E35-369AB	Ceramic	369	E35	L9
W4W-LES317AB	Ceramic	317	–	–
W4W-LES369AB	Ceramic	369	–	–

8" Centers

Model	Cartridge	Handle	Outlet	Spout
W8W-L9E1-369AB	Ceramic	369	E1	L9
W8W-L9E35-369AB	Ceramic	369	E35	L9
W8W-LES317AB	Ceramic	317	–	–
W8W-LES369AB	Ceramic	369	–	–

Cartridges

	Model	Description
	Ceramic	
1	1-099XK	Short stem, right
	1-100XK	Short stem, left

Handles

	Model	Description	
2	317	4" wristblade Vandal proof	
	369	2-3/8" lever Vandal proof	

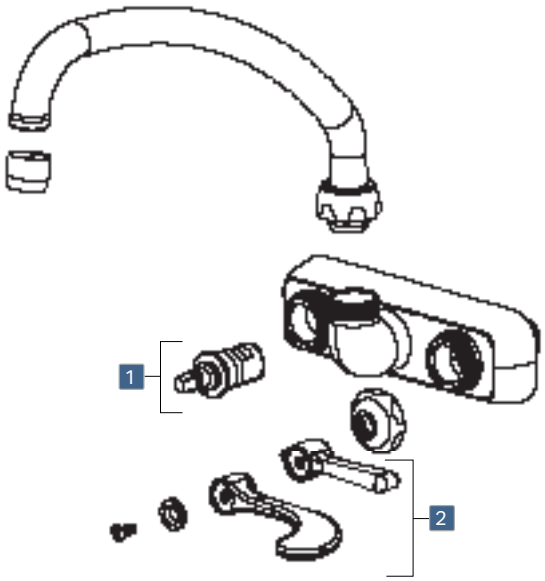

Spouts

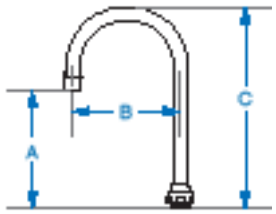

Model	A	B	C	Outlet
Gooseneck Rigid/Swing				
GN2A	6-1/8"	5-1/4"	9-3/4"	Male

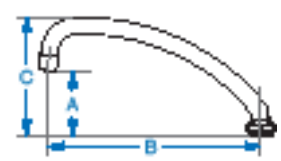

Model	A	B	C	Outlet
L-Type Rigid/Swing				
L9	3-3/4"	9-1/2"	6-1/2"	Male

Outlets

Model	Thread	GPM
Non-Aerated Full Flow		
E1	13/16" - 24 UNS Female	Full
Aerated Standard		
E35	13/16" - 24 UNS Female	1.5

CHICAGO FAUCETS.
Geberit Group

Wall-mounted pre-rinse faucet

Series: 510

- Adjustable arms 7-1/4" - 8-3/4" centers
- 2-5/16" diameter slip flange
- Vandal-resistant lever handles standard
- Ceramic cartridges with integrated check valve
- Polished chrome finish

Model	Cartridge	Handle	Spray
510-GXKCAB	Ceramic	369	90-L

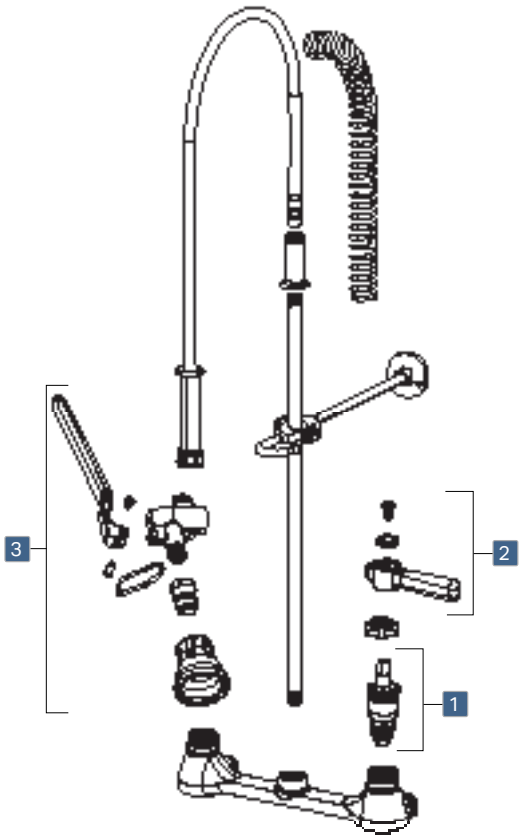

Cartridges

	Model	Description
	Ceramic With Integrated Check Valve	
1	1-099XKC	Short stem, right
	1-100XKC	Short stem, left

Handles

	Model	Description	
2	369	2-3/8" lever Vandal proof	

Spray

	Model	Description	GPM
3	90-L	Pre-rinse spray valve water conserving	1.0

Wall-mounted mini pre-rinse faucet

Series: 523

- Less than half the height of a conventional pre-rinse
- Adjustable arms 7-1/4" - 8-3/4" centers
- Choice of vandal-resistant lever or wristblade handles
- Ceramic cartridges with integrated check valve
- Polished chrome finish

Model	Cartridge	Handle	Spray
523-317ABCP	Ceramic	317	90-L
523-369ABCP	Ceramic	369	90-L

Cartridges

	Model	Description
1	**Ceramic With Integrated Check Valve**	
	1-099XKC	Short stem, right
	1-100XKC	Short stem, left

Handles

	Model	Description	
2	317	4" wristblade Vandal proof	
	369	2-3/8" lever Vandal proof	

Spray

	Model	Description	GPM
3	90-L	Pre-rinse spray valve water conserving	1.0

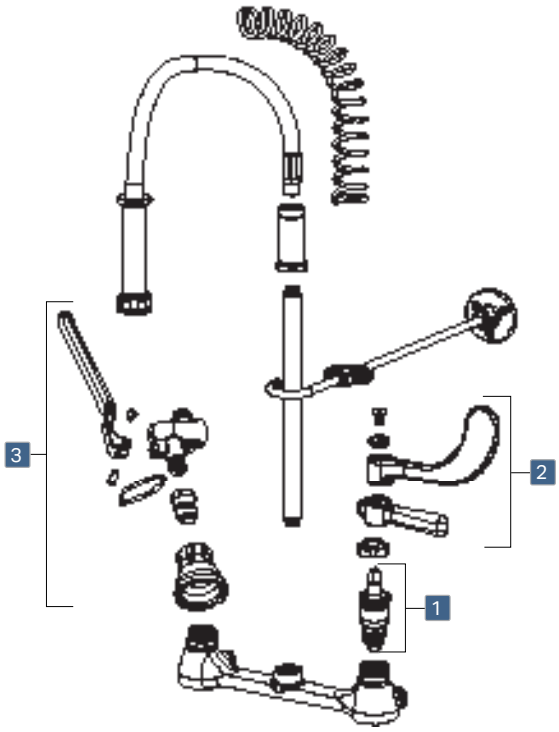

Deck-mounted mini pre-rinse faucet

Series: 924

- Less than half the height of a conventional pre-rinse
- Single hole
- Choice of vandal-resistant lever or wristblade handles
- Ceramic cartridges with integrated check valve
- Polished chrome finish

Model	Cartridge	Handle	Spray
924-317ABCP	Ceramic	317	90-L
924-369ABCP	Ceramic	369	90-L

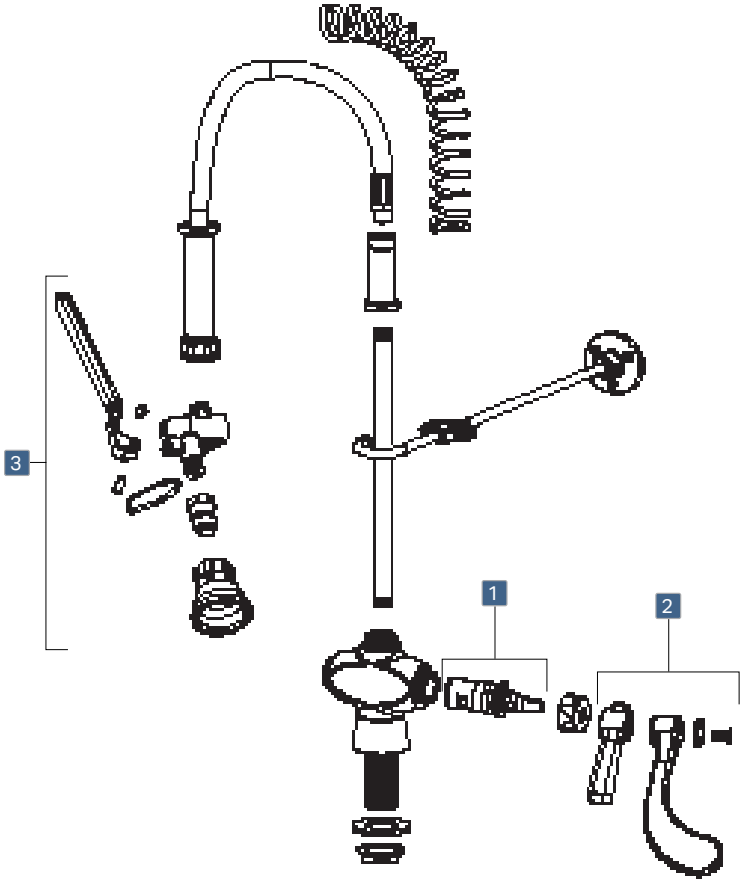

Cartridges

	Model	Description
1	**Ceramic With Integrated Check Valve**	
	1-099XKC	Short stem, right
	1-100XKC	Short stem, left

Handles

	Model	Description	
2	317	4" wristblade Vandal proof	
	369	2-3/8" lever Vandal proof	

Spray

	Model	Description	GPM
3	90-L	Pre-rinse spray valve water conserving	1.0

Adapta-Faucet for pre-rinse applications

Series: 613

- Add a single-handle manual sink faucet to a pre-rinse fitting
- Single hole
- Vandal-resistant lever handle standard
- Quaturn™ compression cartridge
- Quixtop outlet with single screen design, full flow
- Polished chrome finish

Model	Cartridge	Handle	Outlet	Spout
613-AABCP	Quaturn	369	E1	L9
613-AL12E1ABCP	Quaturn	369	E1	L12

Cartridges

	Model	Description
1	**Ceramic With Integrated Check Valve**	
	1-099XT	Short stem, right

Handles

	Model	Description	
2	369	2-3/8" lever Vandal proof	

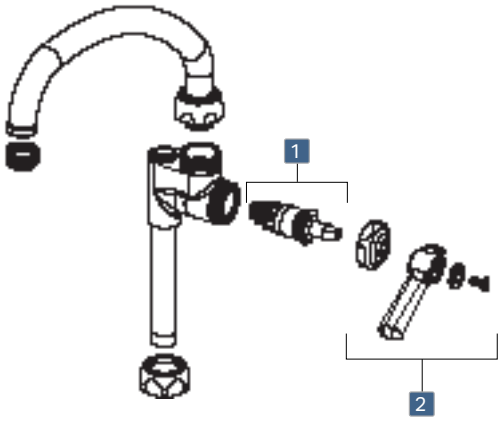

Spouts

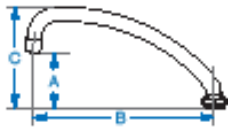

Model	A	B	C	Outlet
L-Type Rigid/Swing				
L9	3-3/4"	9-1/2"	6-1/2"	Male
L12	2-3/8"	12"	4-5/8"	Male

Pre-Rinse assembly and spray

Combine the Adapta-Faucet with everything shown here to add a pre-rinse and Adapta-Faucet assembly to an existing faucet.

Model	Description
919-014	Spring
919-039	Riser, 3/8-18 NPT x 23"
83-29	29" stainless steel hose and handle assembly
83-44	44" stainless steel hose and handle assembly
902-MH	Pipe strap with hook
90-L	Pre-rinse spray valve water conserving
For mini pre-rinse	
83-23	23" stainless steel hose and handle assembly
685-026	Riser, 3/8-18 NPT x 11-5/8" for mini pre-rinse
924-SLEAABCP	Complete mini pre-rinse riser assembly*

*Does not include 90-L pre-rinse spray valve.

CHICAGO FAUCETS.
Geberit Group

Glass Filler with coated push handle

Series: 312, 712, 714

- Single-hole with choice of wall or deck mount
- All-brass piston valve
- Integral, one-piece spout
- Adjustable volume control
- Coated metal handle with locking clip
- Polished chrome finish

Model	Cartridge	Handle	Mount
312-ABCP	–	712-002K	Wall
712-ABCP	–	712-002K	Deck, Tall
714-ABCP	–	712-002K	Deck, Short

Glass Filler with adjustable metering valve

Series: 324

- Single-hole wall mount
- MVP metering cartridge, adjustable run time from 2 to 25 seconds
- 1-3/4" vandal-proof, push handle
- 1/2" NPT female thread inlet
- Polished chrome finish

Model	Cartridge	Handle	Mount
324-665PSHABCP	MVP	665	Wall

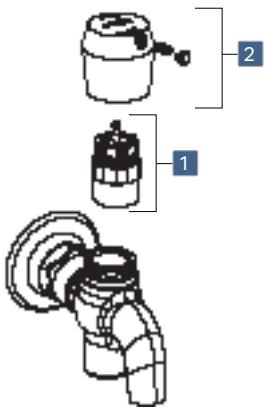

Cartridge

	Model	Description
1	**Metering**	
	667-080K	MVP cartridge and actuator

Handles

	Model	Description	
2	665	1-3/4" MVP metering push handle	

Pot Filler
Series: 332, 515

- Single-hole wall mount
- Vandal-resistant lever handles standard
- Quaturn cartridge
- Polished chrome finish

Wok Filler
Series: 334

Model	Cartridge	Handle	Outlet	Spout
332-ABCP	Quaturn	369	E3	S6
515-ABCP	Quaturn	269	E31	DJ18
334-ABCP	Quaturn	369	E1	L12

Cartridges

	Model	Description
1	**Ceramic**	
	1-099XK	Short stem, right

Handles

	Model	Description	
2	269	2-3/8" heat-resistant lever handle	
	369	2-3/8" lever handle	

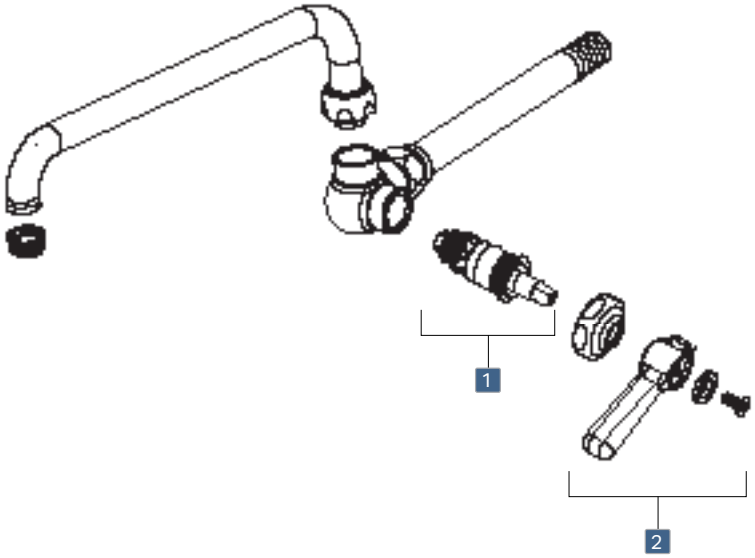

Spouts

Model	A	B	C	Outlet
Double-Jointed Rigid/Swing				
DJ18	2-1/4"	17-3/4"	3-7/8"	Male

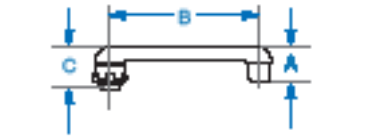

Model	A	B	C	Outlet
S-Type Swing				
S6	1-3/8"	6"	1-5/8"	Male

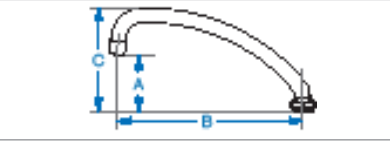

Model	A	B	C	Outlet
L-Type Rigid/Swing				
L12	2-3/8"	12"	4-5/8"	Male

Outlets

Model	Thread	GPM
Aerated Standard		
E3	13/16" - 24 UNS Female	2.2
Non-Aerated Full Flow		
E1	13/16" - 24 UNS Female	Full
Control Valve Full Flow		
E31	13/16" - 24 UNS Female	Full

CHICAGO FAUCETS.
Geberit Group

Twist Drain with coated handle
Series: 1366

- For 3-1/2" sink opening
- 1-1/2" NPT male/female or 2" NPT male thread outlet

Model	Description
1366-NF	Twist drain

Rotary Drain with coated handle
Series: 1367

- For 3-1/2" sink opening
- Includes internal plug valve
- 1-1/2" NPT male/female or 2" NPT male thread outlet

Model	Description
1367-NF	Rotary drain

CHICAGO FAUCETS®
Geberit Group

Tub/Shower

Pressure Balance shower and tub/shower

Series: SH-PB1

- Pressure balancing valve
- Round trim plate
- Integral service stops with checks to prevent cross flow
- 1/2" nominal copper and 1/2" NPT hot and cold supply inlets and outlets
- Available with choice of shower heads, hand showers, slide/grab bars
- Polished chrome

Part Number	Description	Shower	Tub Spout
SH-PB1-00-000	Valve with round trim	–	–
763-CP	Shower diverter valve with trim	–	–
SH-PB1-02-000	Valve w/Shower, Arm, and Flange	600-CP	–
SH-PB1-03-000	Valve w/Shower, Arm, and Flange	620-LCP	–
SH-PB1-02-100	Valve w/ Tub, Shower, Arm, and Flange	600-CP	749-S
SH-PB1-03-100	Valve w/ Tub, Shower, Arm, and Flange	620-LCP	749-S

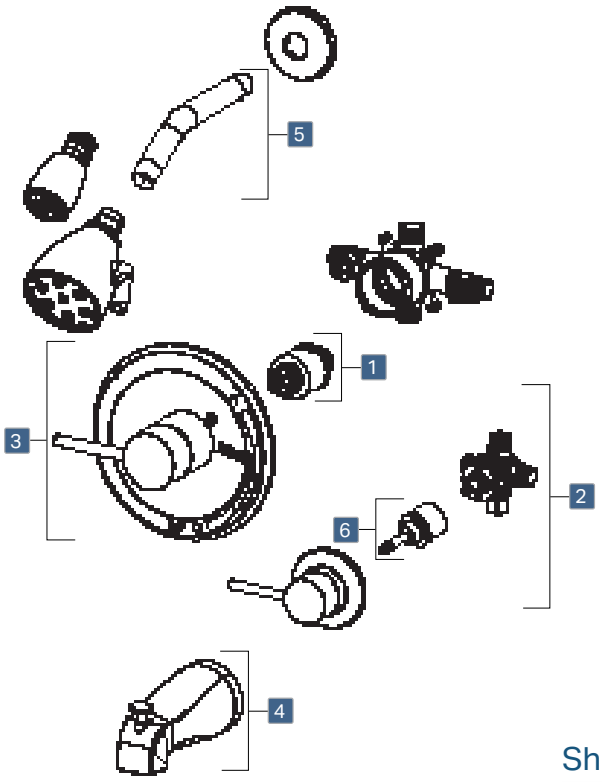

Parts/Components

	Model	Description
1	1910-X	Pressure Balance Cartridge
2	763-CP	Diverter Valve and Trim
3	1910-002	Trim Kit
4	749-S	Tub Spout
5	415-021	Shower Arm
6	763-X	3 Way Diverter Cartridge

Shower Heads

Model	Inlet	GPM
Showerhead with adjustable spray pattern		
600-CP	1/2" NPT female	2.5

Model	Inlet	GPM
Showerhead with swivel ball joint		
620-LCP	1/2" NPT female	1.5

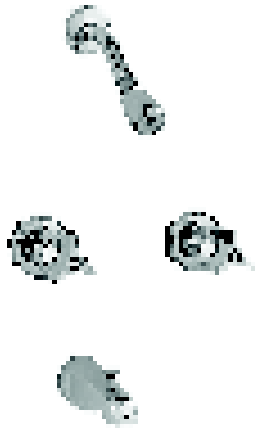

Two-Handle tub/shower

Series: 449

- Concealed, wall-mount with 8" centers
- Tub spout with diverter
- Dual 2-1/2" metal, 3-wing, canopy handles
- Slow compression cartridges
- Polished chrome finish
- **Must be installed with an ASSE 1016 compliant thermostatic valve**

Part Number	Description	Cartridge	Handles	Shower	Tub Spout
449-950CP	Tub, Shower, Arm, and Flange	Slow Compression	950	620	749-S

Parts/Components

	Model	Description
1	217-XTLH	Slow compression cartridge
2	950-PR	3-wing handles
3	633-201	Flange
4	749-S	Tub Spout
5	415-021	Shower Arm

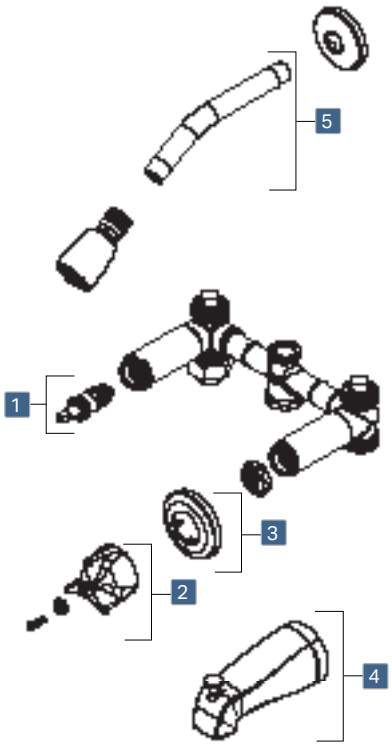

Shower Heads

Model	Inlet	GPM
Showerhead with swivel ball joint		
620-CP	1/2" NPT female	2.5

CHICAGO FAUCETS. Geberit Group

Exposed two-handle service fitting

Series: 752

- Exposed, wall-mount with 8" centers
- Showerhead with ball joint
- Dual 3" metal cross handles
- Slow compression cartridges
- Choice of polished or rough chrome finish
- **Must be installed with an ASSE 1016 compliant thermostatic valve**

Part Number	Description	Cartridge	Handles	Shower
752-CP	Shower, Arm, and Flange	Slow Compression	633	620
752-RCF*	Shower, Arm, and Flange	Slow Compression	633	620

*Rough chrome finish.

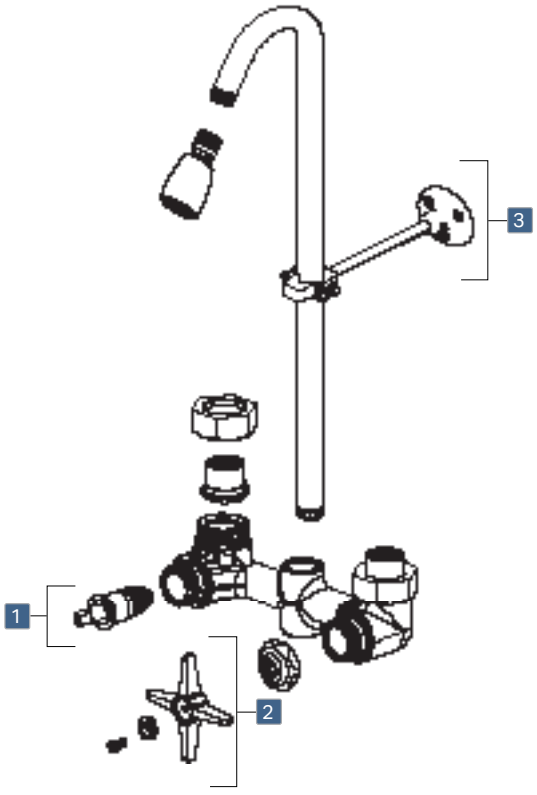

Parts/Components

	Model	Description
1	217-XTLH	Slow compression cartridge
2	633-PR	Cross handles
3	902-M	Pipe support

Shower Heads

Model	Inlet	GPM
Showerhead with swivel ball joint		
620-CP	1/2" NPT female	2.5

Thermostatic/Pressure Balancing valve
Series: 1920

- Provides protection against changes in both pressure and temperature
- Advanced thermal actuator technology
- Maintains a consistent temperature
- Available with a choice of square or round trim
- Polished chrome finish

Part Number	Description
1920-VONF	Valve Only
1920-VOCRCP	Valve With Round Trim
1920-VOCSCP	Valve With Square Trim
1920-VOC401RCP	Valve With Round Trim and 401 Handle

Thermostatic/Pressure Balancing valve with auto-drain
Series: 1920/1921

- Auto-drain added to valve piping flushes water out of system after each use
- Reduces stagnant water in the shower system piping
- Helps limit growth of pathogens in shower system
- Available with a choice of square or round trim
- Polished chrome finish

Part Number	Description
1920-VONF	Valve Only
1920-VOCRCP	Valve With Round Trim
1920-VOCSCP	Valve With Square Trim
1920-039KJKCP	Auto-Drain Wall Elbow
1920-028KJKCP	Auto-Drain Assembly

Part Number	Description
1921-VONF	Valve Only
1921-VOCCP	Valve With Round Trim

Hand spray with auto-drain
Series: 150

- Features two 34˝ stainless steel hoses with automatic hose drain
- Reduces stagnant water in the hand spray hose
- Choice of 1.5 GPM or 2.5 GPM hand spray with pause control
- Available with a choice of standard slide bar or ADA grab bar

Part Number	Description	GPM
151-ADCP	Auto-drain hand spray 24" slide bar	2.5
151-LADCP	Auto-drain hand spray 24" slide bar	1.5
152-ADCP	Auto-drain hand spray 24" ADA grab bar	2.5
152-LADCP	Auto-drain hand spray 24" ADA grab bar	1.5
153-ADCP	Auto-drain hand spray 48" slide bar	2.5
153-LADCP	Auto-drain hand spray 48" slide bar	1.5
154-ADCP	Auto-drain hand spray 36" ADA grab bar	2.5
154-LADCP	Auto-drain hand spray 36" ADA grab bar	1.5

CHICAGO FAUCETS.
Geberit Group

Build A Complete Shower System To Meet Your Specific Needs

We've made it easy for you to **build your own unique system** and receive everything you need for the job while **placing an order with a single part number**.

Build Your Shower System Model Number

Using the codes in the charts on this page:

1. Choose a valve type and then a valve style for Position 1.
2. Choose if you want a diverter valve for Position 2. (Only available with the PB1 valve. All other valves use "0").
3. Choose a shower head for Position 3.
4. If available, choose a tub spout for Position 4.
5. Choose a hand spray for Position 5.
6. Choose a code for a slide or grab bar in Position 6.

Position			1		2	3		4	5	6
Code	SH	–	X	–	X	X	–	X	X	X

Every space must have a code - either "0" or a number for your option choice.

Thermostatic/Pressure Balance Valve

TP1

TP2

TP7

Position	Code	Description
1	TP1	Thermostatic/Pressure Balancing Valve, Round Trim Plate
	TP2	Thermostatic/Pressure Balancing Valve, Square Trim Plate
2	0	No Diverter Valve
3	0	No Shower Head
	1	600-CP 2.5 GPM Shower Head with Adjustable Spray
	2	620-CP 2.5 GPM Shower Head with Swivel Mount
	4	621-CP 2.0 GPM Tamper Resistant Shower Head
	6	622-CP 2.5 GPM Shower Head with Adjustable Spray
4	0	No Tub Spout
	1	749-SJKCP Diverter Tub Spout
5	0	No Hand Spray
	1	2.5 GPM Hand Spray, 59" Hose, Elbow, and Vacuum Breaker
	2	2.5 GPM Hand Spray, 69" Hose, Elbow, and Vacuum Breaker
6	0	No Slide or Grab Bar
	1	9800-124CP 24" Stainless Steel Slide Bar
	2	9800-148CP 48" Stainless Steel Slide Bar
	3	9800-024CP 24" ADA Grab Bar
	4	9800-036CP 36" ADA Grab Bar

Pressure Balance

PB1

Position	Code	Description
1	PB1	Pressure Balancing Valve, Round Escutcheon
2	0	No Diverter Valve
	1	Diverter Valve
3	0	No Shower Head
	1	600-CP 2.5 GPM Shower Head with Adjustable Spray
	2	620-CP 2.5 GPM Shower Head with Swivel Mount
	3	620-LCP 1.5 GPM Shower Head with Swivel Mount
	4	621-CP 2.0 GPM Tamper Resistant Shower Head
	5	621-LCP 1.5 GPM Tamper Resistant Shower Head
	6	622-CP 2.5 GPM Shower Head with Adjustable Spray
	7	622-LCP 1.5 GPM Shower Head with Adjustable Spray
4	0	No Tub Spout
	1	749-SJKCP Diverter Tub Spout
5	0	No Hand Spray
	1	2.5 GPM Hand Spray, 59" Hose, Elbow, and Vacuum Breaker
	2	2.5 GPM Hand Spray, 69" Hose, Elbow, and Vacuum Breaker
	3	1.5 GPM Hand Spray, 59" Hose, Elbow, and Vacuum Breaker
	4	1.5 GPM Hand Spray, 69" Hose, Elbow, and Vacuum Breaker
6	0	No Slide or Grab Bar
	1	9800-124CP 24" Stainless Steel Slide Bar
	2	9800-148CP 48" Stainless Steel Slide Bar
	3	9800-024CP 24" ADA Grab Bar
	4	9800-036CP 36" ADA Grab Bar

Thermostatic/Pressure Balance Valve with Auto-drain

TP4

TP5

TP6

Position	Code	Description
1	TP4	Thermostatic/Pressure Balancing Valve, Integrated Drain
	TP5	Thermostatic/Pressure Balancing Valve, Separate Drain, Round
	TP6	Thermostatic/Pressure Balancing Valve, Separate Drain, Square
2	0	No Diverter Valve
3	0	No Shower Head
	1	600-CP 2.5 GPM Shower Head with Adjustable Spray
	2	620-CP 2.5 GPM Shower Head with Swivel Mount
	4	621-CP 2.0 GPM Tamper Resistant Shower Head
	6	622-CP 2.5 GPM Shower Head with Adjustable Spray
4	0	No Tub Spout
5	0	No Hand Spray
	2	2.5 GPM Hand Spray, 69.5" Hose, Elbow, and Drain System
6	0	No Slide or Grab Bar
	1	9800-124CP 24" Stainless Steel Slide Bar
	2	9800-148CP 48" Stainless Steel Slide Bar
	3	9800-024CP 24" ADA Grab Bar
	4	9800-036CP 36" ADA Grab Bar

1 4-Port Diverter Valve

763-CP (1)

2 Shower Heads with Flange and Arm

600-CP 2.5 GPM (1)

620-CP 2.5 GPM (2)
620-LCP 1.5 GPM (3)

621-CP 2.0 GPM (4)
621-LCP 1.5 GPM (5)

622-CP 2.5 GPM (6)
622-LCP 1.5 GPM (7)

3 Tub Spout

749-SJKCP (1)

4 Hand Spray Assembly

624-CP 2.5 GPM with 59" hose (1)

624-CP 2.5 GPM with 69" hose (2)

624-LCP 1.5 GPM with 59" hose (3)

624-LCP 1.5 GPM with 69" hose (4)

5 Grab and Slide Bars

9800-124CP (1)

9800-148CP (2)

9800-024CP (3)

9800-036CP (4)

CHICAGO FAUCETS.
Geberit Group

TempShield® thermostatic/pressure balancing shower valve
Series: 2500

- Provides protection against changes in both pressure and temperature
- Advanced thermal actuator technology
- Maintains a consistent temperature
- Includes trim
- Polished chrome finish

Part Number	Description
2500-VOCCP	TempShield® thermostatic/pressure balancing shower fitting with showerhead and diverter tub spout options

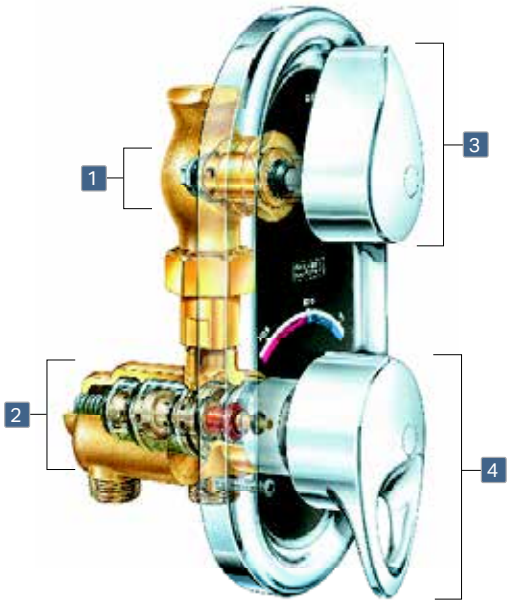

Parts/Components

	Model	Description
1	377-XTRH	Quaturn cartridge, right hand
2	2500-X	Volume and temperature control cartridge
3	2500-004	Small handle
4	2500-003	Large handle

CHICAGO FAUCETS®
Geberit Group

Safety and Infection Prevention

Combination emergency eyewash and touchless gooseneck faucet

Use less space to deliver a lot more safety.

Chicago Faucets has combined an independently operated eyewash with a sensor-operated, touchless faucet.

This space-saving design allows you the extra safety of a fully functional eyewash and a versatile touchless gooseneck faucet without taking up any additional counter space. The eyewash features a large, intuitive push handle for activation with a completely separate supply line for tepid water.

ECAST

- Heavy-duty, cast brass faucet body and spout with vandal resistant outlet
- Independent supply line for eyewash allows connection to an ASSE 1071 thermostatic mixing valve
- Easy-to-locate, large stay-open push paddle for emergency operation
- Touchless faucet available with integral ASSE 1070 compliant thermostatic protection
- Optional Commander™ handheld unit to maintain and monitor faucet
- Choice of AC, DC, and Long Term Power Supply (LTPS)
- Polished chrome finish

A secure compact **Control Box** mounts below the deck and conceals the power, solenoid, mixing valve, and supply.

8453 Series

	Power Source			Mixer		Flow Rate
	AC	DC	LTPS	None	Thermostatic	2.2 GPM
8453-F11J-41ABCP	■	—	—	■	—	■
8453-F11J-43ABCP	■	—	—	—	■	■
8453-F11J-11ABCP	—	■	—	■	—	■
8453-F11J-13ABCP	—	■	—	—	■	■
8453-F11J-61ABCP	—	—	■	■	—	■
8453-F11J-63ABCP	—	—	■	—	■	■

Parts/Components

	Model	Description
1	ELR-001	Module
2	8400-004	Dust cover for eyewash (1 per)
3	8400-028	Eyewash aerator kit
4	8400-020	Eyewash sub-assembly
5	243.153.00.1	Batteries and Holder
6	243.869.00.1	Long Life Battery
7	243.152.AB.1	Solenoid Valve

Handle

	Model	Description	
8	8400-021	Eyewash Paddle	

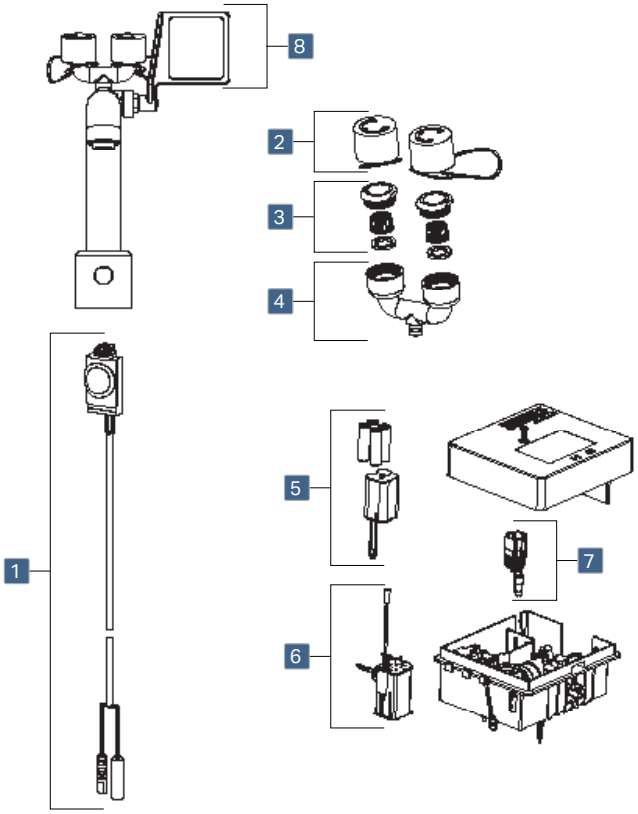

Spout Dimensions

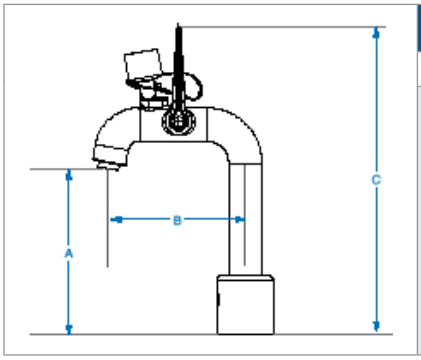

Model	A	B	C	Outlet
8453	7-1/2"	6-1/8"	13-7/8"	Female

Outlet

Model	Thread	GPM
Non-Aerated Spray Vandal Resistant		
E12VP	13/16" - 27 UNS Male	2.2

CHICAGO FAUCETS. Geberit Group

Combination emergency eyewash and gooseneck faucets

With dual handles

Series: 8452

- 4" wristblade handles
- Eyewash outlet: 3.3 GPM at 50 PSI
- Choice of 2.2 GPM aerated or 1.0 GPM laminar vandal resistant outlets
- Quaturn™ compression cartridges
- Independent supplies for faucet and eyewash

Model	Handle	Outlet	GPM
8452-ABCP	317	E12VP	2.2 GPM
8452-E64VPABCP	317	E64VP*	1.0 GPM

* Laminar flow non-aerating outlet

ECAST

With single handle sidemix

Series: 8451

- 2-3/4" lever handle
- Eyewash outlet: 3.3 GPM at 50 PSI
- Choice of 2.2 GPM aerated or 1.0 GPM laminar vandal resistant outlets
- Ceramic cartridge
- Independent supplies for faucet and eyewash

Model	Handle	Outlet	GPM
8451-ABCP	2200-225K	E12VP	2.2 GPM
8451-E64VPABCP	2200-225K	E64VP*	1.0 GPM

* Laminar flow non-aerating outlet

ECAST

Retrofit spout

Series: 8450

- Eyewash outlet: 3.3 GPM at 50 PSI
- Choice of 2.2 GPM aerated or 1.0 GPM laminar vandal resistant outlets
- Spout only – requires remote valve or faucet body for operation

Model	Outlet	GPM
8450-ABCP	E12VP	2.2 GPM
8450-E64VPABCP	E64VP*	1.0 GPM

* Laminar flow non-aerating outlet

ECAST

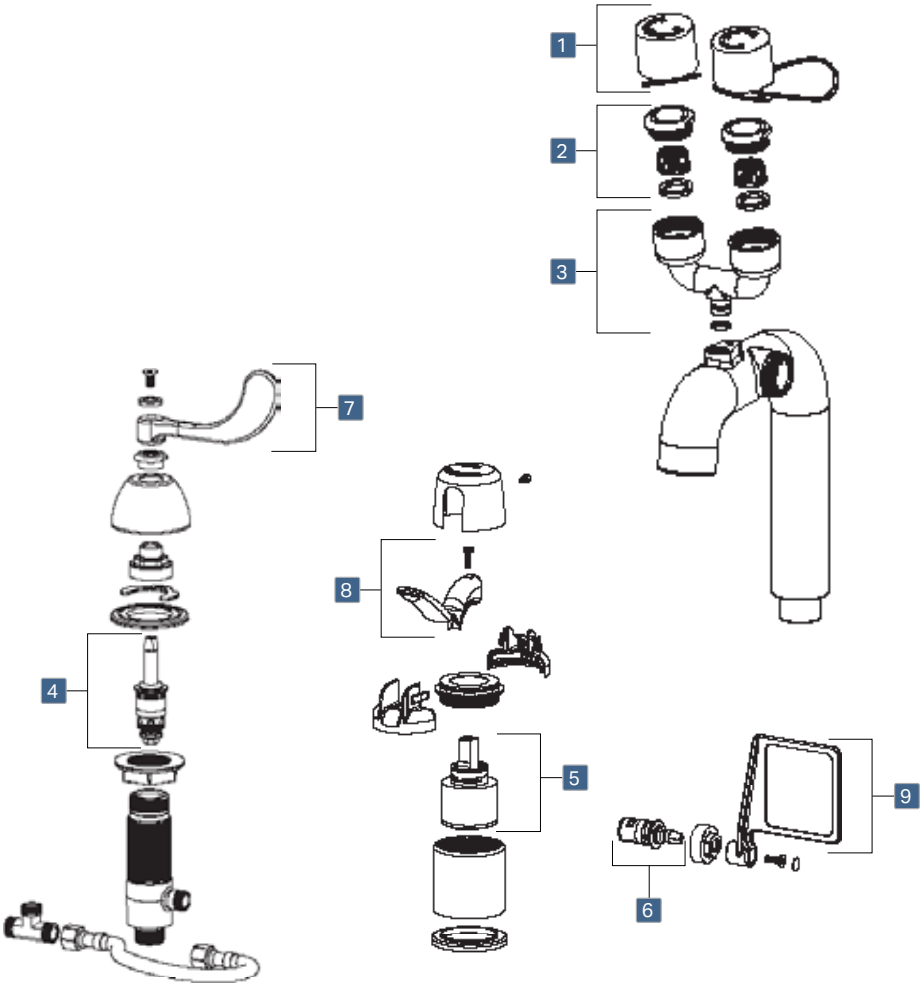

Parts/Components

	Model	Description
1	8400-004	Dust cover for eyewash (1 per)
2	8400-028	Eyewash aerator kit
3	8400-020	Eyewash sub-assembly

Cartridges

	Model	Description
4	377-XTLH 377-XTRH	Quaturn cartridge (left) Quaturn cartridge (right)
5	2300-X	Ceramic cartridge
6	1-099XK	Ceramic cartridge

Handles

	Model	Description	
7	317	4" wristblade Vandal proof	
8	2200-225K	2-3/4" lever handle	
9	8400-021	Eyewash Paddle	

Spout Dimensions

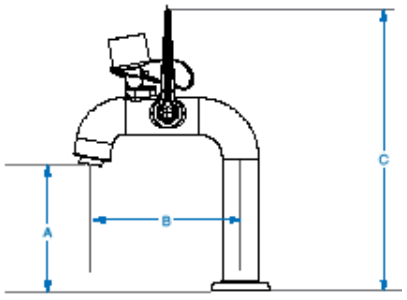

Model	A	B	C	Outlet
8450	5-1/8"	6-1/8"	11-1/2"	Female

Outlet

Model	Thread	GPM
Non-Aerated Spray Vandal Resistant		
E12VP	13/16" - 27 UNS Male	2.2
Laminar Flow Non-Aerating Vandal Resistant		
E64VP	13/16" - 27 UNS Male	1.0

CHICAGO FAUCETS.
Geberit Group

1017-CSTABCP angle stop with integral check

A reliable and serviceable solution for healthcare hand washing sinks to help prevent cross-flow.

The Chicago Faucets 1017-CSTABCP provides the highest quality positive stop design with an integral spring check valve to help eliminate cross-flow within the plumbing system caused by thermal expansion, dirt, and other debris.

Easy to Test

Easily identify valves in need of maintenance by simply closing stop and looking for leaks at faucet.

Added Safety

Provides an extra layer of protection with a check valve in the plumbing system before the ASSE 1070 mixing valve and its potential cross-flow problems

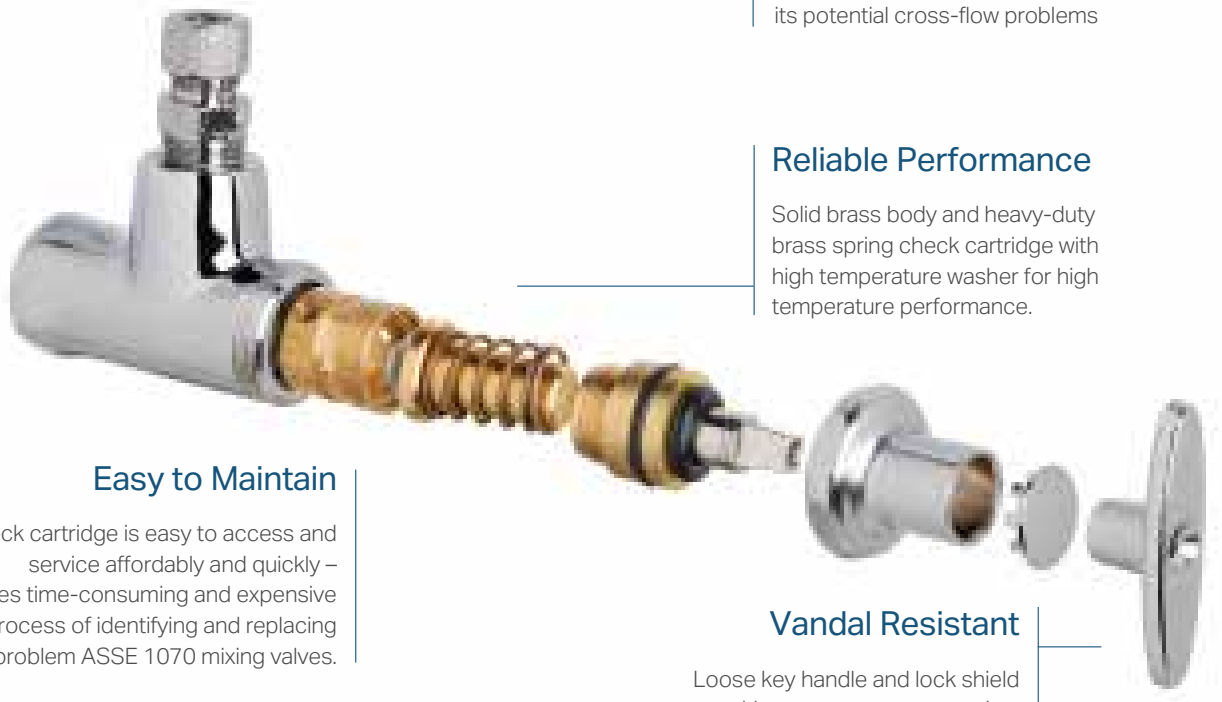

Reliable Performance

Solid brass body and heavy-duty brass spring check cartridge with high temperature washer for high temperature performance.

Easy to Maintain

Check cartridge is easy to access and service affordably and quickly – eliminates time-consuming and expensive process of identifying and replacing problem ASSE 1070 mixing valves.

Vandal Resistant

Loose key handle and lock shield cap with cover prevent tampering.

Model	Cartridge	Handle	Inlet	Outlet	Riser
1017-CSTABCP	Slow Compression	293-006	1/2" NPT female	3/8" O.D. female compression	Yes

XKC Series ceramic cartridges with integrated check valve

Our XKC cartridges prevent cross-flow by incorporating a check valve directly inside the cartridge. These cartridges feature commercial grade ceramic design with a solid brass sleeve for durabilty and long life.

Model	Description
Short Stem with Exposed Cap	
1-099XKCJKABNF	Right Hand with Integrated Check Valve
1-100XKCJKABNF	Left Hand with Integrated Check Valve
Long Stem with Concealed Cap	
977-XKCRHJKABNF	Right Hand with Integrated Check Valve
977-XKCLHJKABNF	Left Hand with Integrated Check Valve

Thermostatic mixing valves
Series: 131

- Certified to ASSE 1070 standards
- Integral inlet check valves to protect against cross-flow
- Brass body construction
- Temperature adjustment cap with locking feature
- Up to 4.6 GPM flow rate for single or multiple faucet installations

Model	Description
131-ABNF	Thermostatic Mixing Valve for 3-port, Single Outlet
131-CABNF	Thermostatic Mixing Valve for 4-port, Dual Outlet

Thermostatic mixing valves with thermal flush option
Series: 131

- Built-in override for thermal disinfection procedures
- Certified to ASSE 1070 standards
- Integral inlet check valves to protect against cross-flow
- Brass body construction
- Up to 4.6 GPM flow rate for single or multiple faucet installations

Model	Description
131-CFMAB	Thermostatic Valve with Integrated Thermal Flush Option, 4-port, Single Outlet
131-FMAB	Thermostatic Valve with Integrated Thermal Flush Option, 3-port, Dual Outlet

Thermostatic mixing valve
122-ABNF

- Certified to ASSE 1017, 1069, and 1070 standards
- Integral inlet check valves to protect against cross-flow
- Bronze body construction
- Double throttling design controls hot and cold water supply to the mixed outlet
- 12 GPM flow rate for hot water source applications, end use fixture fittings, and for single or multiple faucet applications

Model	Description
122-ABNF	ECAST® thermostatic mixing valve

Mechanical mixing valve for single faucet installations
242.165.AB.1

- Includes inlet check valves
- 1/2" NPSM male thread inlet, 1/2" NPSM female thread outlet
- Inlet cone-shaped filter washers
- Delivers minimum flow rate of 2.5 GPM
- Manual temperature adjustment with locking screw

Model	Description
242.165.AB.1	Concealed mechanical mixing valve for single faucet installations

CHICAGO FAUCETS®
Geberit Group

Stops and Urinals

Slow Compression supply stops

Series: 45, 442, 1006, 1013, 1017, 1025

- Choice of angle or straight stop design
- Available handle options include 2-1/4" tee or 3" cross
- Slow compression operating cartridge
- Polished chrome finish

Straight Stops

Model	Cartridge	Handle	Inlet	Outlet	Extension
45-ABCP	Slow Compression	633	1/2" NPT female	1/2" NPT female	No
45-LKABCP	Slow Compression	293-006	1/2" NPT female	1/2" NPT female	No

Angle Stops

Model	Cartridge	Handle	Inlet	Outlet	Riser
442-LKABCP	Slow Compression	293-006	1/2" NPT female	1/2" NPT female	No
1006-ABCP	Slow Compression	293-006	1/2" NPT female	1/2" NPT female	Yes
1013-ABCP	Slow Compression	293-006	3/8" NPT female	3/8" O.D. female compression	No
1016-ABCP	Slow Compression	293-006	3/8" NPT female	3/8" O.D. female compression	Yes
1017-ABCP	Slow Compression	293-006	1/2" NPT female	3/8" O.D. female compression	Yes
1025-ABCP	Slow Compression	293-006	5/8" O.D. compression	3/8" O.D. female compression	No

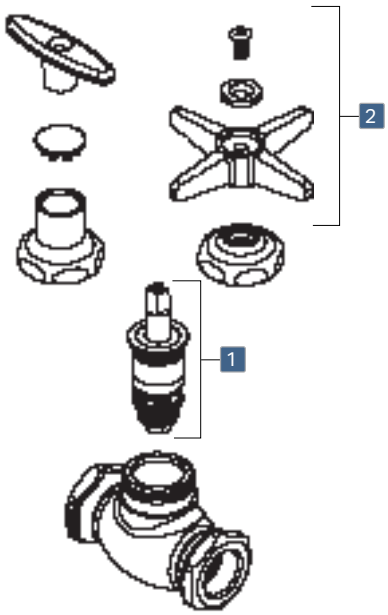

Cartridges

	Model	Description
1	**Slow Compression**	
	217-XTLH	Short stem, left

Handles

	Model	Description	
2	293-006	2-1/4" tee	
	633	3" cross	

Ball Valve supply stops
Series: STB

- Heavy duty forged brass body
- Valve features chrome plated brass ball
- Deep loose key well for enhanced vandal resistance
- 2" tee handle
- Polished chrome finish

Angle Stops

Model	Handle	Inlet	Outlet	Extension
STB-11-00-AB	2" Tee	3/8" NPT female	3/8" O.D. female compression	No
STB-21-00-AB	2" Tee	1/2" NPT female	3/8" O.D. female compression	No
STB-31-00-AB	2" Tee	5/8" O.D. compression	3/8" O.D. female compression	No
STB-41-00-AB	2" Tee	5/8" O.D. copper sweat	3/8" O.D. female compression	No
STB-51-00-AB	2" Tee	5/8" O.D. copper sweat	3/8" O.D. female compression	Yes

Compression Valve supply stops
Series: STC

- Heavy duty forged brass body
- Valve features metal stem for added durability
- Deep loose key well for enhanced vandal resistance
- 2" tee handle
- Polished chrome finish

Angle Stops

Model	Handle	Inlet	Outlet	Extension
STC-11-00-AB	2" Tee	3/8" NPT female	3/8" O.D. female compression	No
STC-12-00-AB	2" Tee	3/8" NPT female	1/2" O.D. female compression	No
STC-21-00-AB	2" Tee	1/2" NPT female	3/8" O.D. female compression	No
STC-22-00-AB	2" Tee	1/2" NPT female	1/2" O.D. female compression	No
STC-31-00-AB	2" Tee	5/8" O.D. female compression	3/8" O.D. female compression	No
STC-32-00-AB	2" Tee	5/8" O.D. female compression	1/2" O.D. female compression	No
STC-41-00-AB	2" Tee	5/8" O.D. copper sweat	3/8" O.D. female compression	No
STC-42-00-AB	2" Tee	5/8" O.D. copper sweat	1/2" O.D. female compression	No
STC-51-00-AB	2" Tee	5/8" O.D. copper sweat	3/8" O.D. female compression	Yes
STC-52-00-AB	2" Tee	5/8" O.D. copper sweat	1/2" O.D. female compression	Yes

Urinal Valves

Series: 339, 732, 733

- Choice of angle or straight valve design
- Available with push or oscillating handle options
- Adjustable metering cartridge
- Polished chrome finish

Straight Valves

Model	Cartridge	Handle
339-665PSHCP	MVP	665
733-665PSHCP	MVP	665
733-OHCP	NAIAD	386-010K
733-VB665PSHCP*	MVP	665

Angle Valves

Model	Cartridge	Handle
732-665PSHCP	MVP	665
732-CP	NAIAD	Push
732-OHCP	NAIAD	386-010K
732-VB665PSHCP*	MVP	665

*With vacuum breaker.

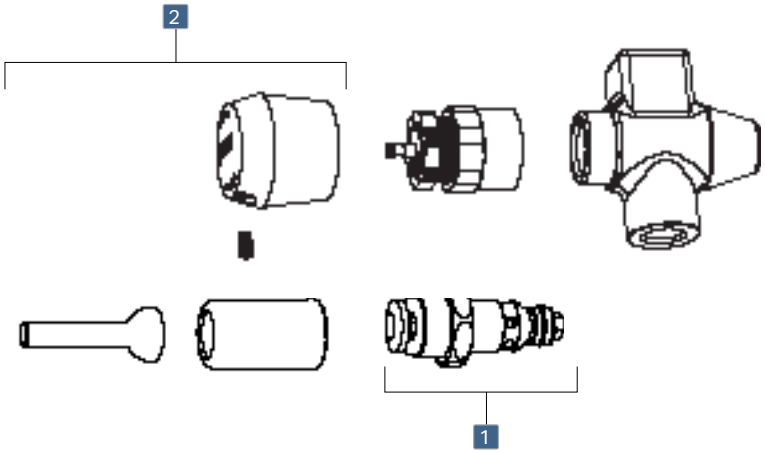

Cartridges

	Model	Description
1	**Metering**	
	333-XSLOP	NAIAD cartridge with "PUSH" handle
	386-XSLO	NAIAD cartridge
	665-190K	MVP cartridge and actuator

Handles

	Model	Description	
2	386-010K	3-1/2" oscillating handle	
	665	1-3/4" MVP metering push handle	

CHICAGO FAUCETS®
Geberit Group

Components

Gooseneck Spouts

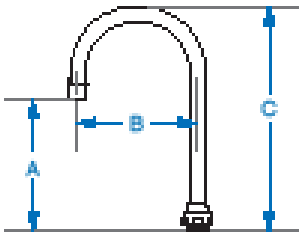

- Swing Spouts – 360º rotation
- Restricted Swing Spouts* – Adjustable rotation of 70º or 120º
- Rigid/Swing Spouts – Adjustable for 360º rotation or fixed position

Model	A	B	C	Outlet Thread
Swing				
GN10ASWGJKABCP	7″	10″	13-1/2″	13/16″ - 24 UNS Male
GN10BSWGJKABCP	6-7/8″	10″	13-1/2″	3/8″-18 NPSM Female
GN12ASWGJKABCP	7″	12″	14-1/2″	13/16″ - 24 UNS Male
GN12BSWGJKABCP	6-7/8″	12″	14-1/2″	3/8″-18 NPSM Female
GN12SWGJKABCP	7″	12″	14-1/2″	Plain
Swing with Atmospheric Vacuum Breaker				
GN12BVBSWGJKABCP	6-3/4″	12″	10-3/4″	3/8″-18 NPSM Female
Restricted Swing				
GN2ARSJKABCP	6-1/8″	5-1/4″	9-3/4″	13/16″ - 24 UNS Male
GN8ARSJKABCP	6″	8″	11-1/4″	13/16″ - 24 UNS Male
Rigid/Swing				
GN1AJKABCP	5-7/8″	3-1/2″	8-3/8″	13/16″ - 24 UNS Male
GN1BJKABCP	5-1/2″	3-1/2″	8-3/8″	3/8″ - 18 NPSM Female
GN1JKABCP	5-7/8″	3-1/2″	8-3/8″	Plain
GN2AH13JKABCP	9-3/8″	5-1/4″	13″	13/16″ - 24 UNS Male
GN2AH17JKABCP	13-3/8″	5-1/4″	17″	13/16″ - 24 UNS Male
GN2AH8JKABCP	4-3/8″	5-1/4″	8″	13/16″ - 24 UNS Male
GN2AJKABCP	6-1/8″	5-1/4″	9-3/4″	13/16″ - 24 UNS Male
GN2BH13JKABCP	9″	5-1/4″	13″	3/8″ - 18 NPSM Female
GN2BH17JKABCP	12-3/4″	5-1/4″	17″	3/8″ - 18 NPSM Female
GN2BH8JKABCP	4″	5-1/4″	8″	3/8″ - 18 NPSM Female
GN2BJKABCP	5-5/8″	5-1/4″	9-3/4″	3/8″ - 18 NPSM Female
GN2BJKCTF[1]	5-5/8″	5-1/4″	9-3/4″	3/8″ - 18 NPSM Female
GN2BJKSAM[2]	5-5/8″	5-1/4″	9-3/4″	3/8″ - 18 NPSM Female
GN2H13JKABCP	9-3/8″	5-1/4″	13″	Plain
GN2H17JKABCP	13-3/8″	5-1/4″	17″	Plain
GN2H8JKABCP	4-3/8″	5-1/4″	8″	Plain
GN2JKABCP	5-5/8″	5-1/4″	9-3/4″	Plain
GN8AJKABCP	6″	8″	11-1/4″	13/16″ - 24 UNS Male
GN8BJKABCP	5-3/4″	8″	11-1/4″	3/8″ - 18 NPSM Female
GN8BJKCTF[1]	5-3/4″	8″	11-1/4″	3/8″ - 18 NPSM Female
GN8JKABCP	6-1/8″	8″	11-1/4″	Plain

[1]Tin lined [2]Satin antimicrobial finish
* Available on 201 Series fittings

Model	A	B	C	Outlet Thread
Rigid/Swing with 0.5 GPM Laminar Flow Control Insert				
GN1FC3JKABCP	5-7/8″	3-1/2″	8-3/8″	Plain
GN8AFC3JKABCP	6″	8″	11-1/4″	13/16″ - 24 UNS Male
Rigid/Swing with 1.0 GPM Laminar Flow Control Insert				
GN1FC1JKABCP	5-7/8″	3-1/2″	8-3/8″	Plain
GN2FC1JKABCP	6-1/8″	5-1/4″	9-3/4″	Plain
GN2H8FC1JKABCP	4-3/8″	5-1/4″	8″	Plain
GN8BFC1JKABCP	5-3/4″	8″	11-1/4″	3/8″ - 18 NPSM Female
GN8FC1JKABCP	6-1/8″	8″	11-1/4″	Plain
Rigid/Swing with 1.5 GPM Laminar Flow Control Insert				
GN1AFCJKABCP	5-7/8″	3-1/2″	8-3/8″	13/16″ - 24 UNS Male
GN1FCJKABCP	5-7/8″	3-1/2″	8-3/8″	Plain
GN1BFCJKABCP	5-1/2″	3-1/2″	8-3/8″	3/8″ - 18 NPSM Female
GN2AFCJKABCP	6-1/8″	5-1/4″	9-3/4″	13/16″ - 24 UNS Male
GN2AH8FCJKABCP	4-3/8″	5-1/4″	8″	13/16″ - 24 UNS Male
GN2BFCJKABCP	5-5/8″	5-1/4″	9-3/4″	3/8″ - 18 NPSM Female
GN2FCJKABCP	6-1/8″	5-1/4″	9-3/4″	Plain
GN2H8FCJKABCP	4-3/8″	5-1/4″	8″	Plain
GN2H13FCJKABCP	9-3/8″	5-1/4″	13″	Plain
GN8AFCE3JKABCP	6″	8″	11-1/4″	13/16″ - 24 UNS Male
GN8AFCJKABCP	6″	8″	11-1/4″	13/16″ - 24 UNS Male
GN8BFCJKABCP	5-3/4″	8″	11-1/4″	3/8″ - 18 NPSM Female
GN8FCJKABCP	6-1/8″	8″	11-1/4″	Plain
Rigid/Swing with 2.0 GPM Laminar Flow Control Insert				
GN1FC2JKABCP	5-7/8″	3-1/2″	8-3/8″	Plain
GN2FC2JKABCP	6-1/8″	5-1/4″	9-3/4″	Plain
GN8FC2JKABCP	6-1/8″	8″	11-1/4″	Plain
Rigid/Swing with Atmospheric Vacuum Breaker				
GN1BVBJKABCP	5-3/4″	4 1/2″	9-1/2″	3/8″ - 18 NPSM Female
GN1BVBFCJKCP	5-3/4″	4-1/2″	9-1/2″	3/8″ - 18 NPSM Female
GN2BVBFCJKABCP	5-3/4″	6″	9-1/2″	3/8″ - 18 NPSM Female
GN2BVBJKABCP	5-3/4″	6″	9-1/2″	3/8″ - 18 NPSM Female
GN8BVBFCJKCP	5-3/4″	8″	9-1/2″	3/8″ - 18 NPSM Female
GN8BVBJKABCP	5-3/4″	8″	9-1/2″	3/8″ - 18 NPSM Female

High Arch Spouts

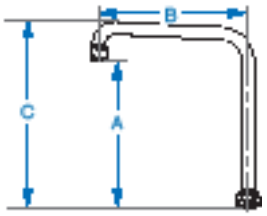

- Rigid/Swing Spouts – Field adjustable for 360º rotation or fixed position
- Restricted Swing Spouts* – Field adjustable rotation of 70º or 120º

Model	A	B	C	Outlet Thread
Rigid/Swing				
HA8AJKABCP	8-3/8″	8″	10″	13/16″ - 24 UNS Male

Model	A	B	C	Outlet Thread
Restricted Swing				
HA8ARSJKABCP	8-3/8″	8″	10″	13/16″ - 24 UNS Male

S-Type Spouts

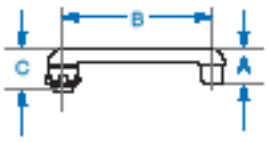

- Swing Spouts – 360º rotation

Model	A	B	C	Outlet Thread
Swing				
S6LEOJKAB	1″	6″	1-5/8″	13/16″ - 24 UNS Male

L-Type Spouts

- Swing Spouts – 360º rotation
- Restricted Swing Spouts* – Adjustable rotation of 70º or 120º

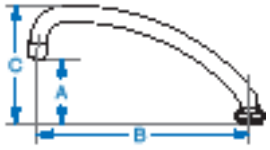

Model	A	B	C	Outlet Thread
Swing				
L12LEOJKAB	2-7/8″	12″	4-5/8″	13/16″ - 24 UNS Male
L15LEOJKABCP	2-1/4″	14″	4-5/8″	13/16″ - 24 UNS Male
L8LEOJKAB	3-5/16″	8″	4-3/8″	13/16″ - 24 UNS Male
L9LEOJKAB	4″	9-1/2″	6-1/2″	13/16″ - 24 UNS Male
Swing with Atmospheric Vacuum Breaker				
L5VBJKCP	1″	5-3/4″	4″	3/4″ - 14 Male Hose
L5VBJKRCF	1″	5-3/4″	4″	3/4″ - 14 Male Hose

Model	A	B	C	Outlet Thread
Swing with Atmospheric Vacuum Breaker (cont)				
L6BVBJKABCP	1/4″	6″	4″	3/8″ - 18 NPSM Female
L6BVBJKRCF	1/4″	6″	4″	3/8″ - 18 NPSM Female
L8BVBJKABCP	1/4″	8″	4″	3/8″ - 18 NPSM Female
Restricted Swing				
L9ARSJKABCP	3-5/8″	9-1/2″	6-1/2″	13/16″ - 24 UNS Male
Swing Tube Spout with Integral Flange				
1888-001KJKABCP	3-7/8″	9-1/2″	6-3/8″	13/16″ - 24 UNS Male

Double-Bend Spouts

- Rigid/Swing Spouts – Adjustable for 360º rotation or fixed position

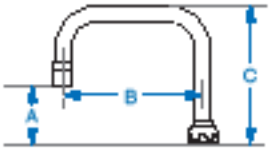

Model	A	B	C	Outlet Thread
Rigid/Swing				
DB6AJKABCP	3-1/8″	6-1/4″	6-3/8″	13/16″ - 24 UNS Male
DB6AE35JKABCP	3-1/8″	6-1/4″	6-3/8″	13/16″ - 24 UNS Male

Model	A	B	C	Outlet Thread
Rigid/Swing (cont)				
DB6FCJKABCP	3-1/8″	6-1/4″	6-3/8″	Plain
DB6JKABCP	3-1/8″	6-1/4″	6-3/8″	Plain

Double-Jointed Spouts

- Swing Spouts – 360º rotation

Model	A	B	C	Outlet Thread
Swing				
DJ13LEOJKAB	2-1/4″	13″	3-7/8″	13/16″ - 24 UNS Male
DJ18LEOJKAB	2-1/4″	17-3/4″	3-7/8″	13/16″ - 24 UNS Male
DJ21LEOJKAB	6-1/2″	21-1/4″	8-3/8″	13/16″ - 24 UNS Male

Model	A	B	C	Outlet Thread
Swing (cont)				
DJ24LEOJKAB	5-1/8″	23-3/4″	6-3/4″	13/16″ - 24 UNS Male
DJ26LEOJKAB	5″	25-3/4″	6-3/4″	13/16″ - 24 UNS Male

Service Sink Spouts

- Rigid Spouts - fixed position

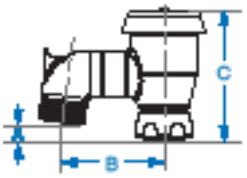

Model	A	B	C	Outlet Thread
Rigid Atmospheric Vacuum Breaker Spout with Pail Hook				
305-SVBJKCP	1/2″	2-3/8″	3-1/8″	3/4″ - 11-1/2 Male Hose
305-SVBJKRCF[1]	1/2″	2-3/8″	3-1/8″	3/4″ - 11-1/2 Male Hose
Wall-Mounted Rigid Short Spout with Wall Flange				
781-001KJKCP	1-1/8″	2-3/8″	n/a	3/4″ - 11-1/2 Male Hose
Wall-Mounted Rigid Short Spout with Wall Flange and Pail Hook				
782-001KJKCP	1-3/8″	5-3/4″	n/a	3/4″ - 11-1/2 Male Hose
782-001KVBJKCP	1/4″	8″	3-1/8″	3/4″ - 11-1/2 Male Hose

Model	A	B	C	Outlet Thread
Rigid Spout with Pail Hook and Pipe Support				
814-SJKCP	3/4″	7-1/8″	2-3/8″	3/4″ - 11-1/2 Male Hose
814-SVBJKCP	1/4″	7-1/8″	3-1/8″	3/4″ - 11-1/2 Male Hose
815-SJKCP	3/4″	7-1/2″	2-3/8″	3/4″ - 11-1/2 Male Hose
815-SVBJKCP	1/4″	7-1/2″	3-1/8″	3/4″ - 11-1/2 Male Hose
Rigid Vacuum Breaker Spout with Pail Hook				
897-SJKCP	1-3/8″	5-3/4″	3-1/8″	3/4″- 11-1/2 Male Hose
897-SJKRCF[1]	1-3/8″	5-3/4″	3-1/8″	3/4″ - 11-1/2 Male Hose

[1]Rough chrome finish

CHICAGO FAUCETS. Geberit Group

Outlets

Aerated Outlets

Model	Outlet Thread	GPM
Vandal Resistant		
E12VPJKABCP	13/16″ - 27 UNS Male	2.2
E34VPJKABCP	13/16″ - 27 UNS Male	1.5
E35VPJKABCP	13/16″ - 24 UNS Female	1.5
E3VPJKABCP	13/16″ - 24 UNS Female	2.2
E19JKABCP	13/16″ - 24 UNS Female with Anti-hose Flange	2.2
E3-2VPJKABCP	E3 with 3/8″ - 18 NPSM Male Adapter	2.2
Standard		
E12JKABCP	13/16″ - 27 UNS Male	2.2
E3-2JKABCP	E3 with 3/8″ - 18 NPSM Male Adapter	2.2
E3-2JKSAM	3/8″ - 18 NPSM Male, Satin Finish	2.2
E3-3JKABCP	E3 with 3/8″ - 18 NPSM Female Inlet Adapter	2.2
E34JKABCP	13/16″ - 27 UNS Male	1.5
E35JKABCP	13/16″ - 24 UNS Female	1.5
E3JKABCP	13/16″ - 24 UNS Female	2.2
Adjustable Spray/Aerator		
E25JKABCP	13/16″ - 24 UNS Female	2.2

Non-Aerated Outlets

Model	Outlet Thread	GPM
Full Flow		
E1JKABRCF	13/16″ - 24 UNS Female	Full Flow
E1MJKABRCF	3/8″ - 18 NPSM Male	Full Flow
Spray		
E15JKABCP	13/16″ - 27 UNS Male	1.5
E4FJKABCP	3/8″ - 18 NPSM Female	1.5
E4JKABCP	3/8″ - 18 NPSM Male	1.5
E21JKABCP	9/16″ - 18 NPSM Male	2.0
E2605-5JKABCP	13/16″ - 24 UNS Female	0.5
E2605JKABCP	13/16″ - 27 UNS Male	0.5
E26-5JKABCP	13/16″ - 24 UNS Female	1.0
E26JKABCP	13/16″ - 27 UNS Male	1.0
E38JKABCP	13/16″ - 24 UNS Female	0.35
E39JKABCP	13/16″ - 27 UNS Male	0.35
Spray Vandal Resistant		
E2805-5JKABCP	13/16″ - 24 UNS Female	0.5
E2805JKABCP	13/16″ - 27 UNS Male	0.5
E28-5JKABCP	13/16″ - 24 UNS Female	1.0
E28JKABCP	13/16″ - 27 UNS Male	1.0
E38VPJKABCP	13/16″ - 24 UNS Female	0.35
E39VPJKABCP	13/16″ - 27 UNS Male	0.35
E60VPJKABCP	13/16″ - 27 UNS Male, Antimicrobial	0.5
E61VPJKABCP	13/16″ - 24 UNS Female, Antimicrobial	0.5

Laminar Outlets

Model	Outlet Thread	GPM
Vandal Resistant		
E29VPJKABCP	13/16″ - 24 UNS Female	2.2
E32VPJKABCP	13/16″ - 27 UNS Male	2.2
E36VPJKABCP	13/16″ - 24 UNS Female	1.5
E37VPJKABCP	13/16″ - 27 UNS Male	1.5
E62VPJKABCP	13/16″ - 27 UNS Male, Antimicrobial	1.5
E63VPJKABCP	13/16″ - 24 UNS Female	1.5
E64VPJKABCP	13/16″ - 27 UNS Male	1.0
E65VPJKABCP	13/16″ - 24 UNS Female	1.0
E66VPJKABCP	13/16″ - 27 UNS Male	0.5
E67VPJKABCP	13/16″ - 24 UNS Female	0.5
Standard		
E29JKABCP	13/16″ - 24 UNS Female	2.2
E32JKABCP	13/16″ - 27 UNS Male	2.2
E36JKABCP	13/16″ - 24 UNS Female	1.5
E37JKABCP	13/16″ - 27 UNS Male	1.5
E70JKABCP	13/16″ - 27 UNS Male	0.5
E72JKABCP	13/16″ - 24 UNS Female	0.5
E73JKABCP	13/16″ - 24 UNS Female	1.0
E74JKABCP	13/16″ - 27 UNS Male	1.0

Outlet Adapters

Model	Inlet	Outlet
K1JKABCP	13/16″ - 24 NPSM Female	3/8″ - 18 NPSM Female
K2JKABRCF	3/8″ - 18 NPSM Male	13/16″ - 24 NPSM Male
K3JKABCP	3/4″ - 11 1/2 Female Hose	13/16″ - 24 NPSM Male
K4JKABCP	13/16″ - 24 NPSM Female	55/64″ - 27 UNS Male
1-159JKCP	13/16″ - 24 UNS Female	N/A
E2-2JKRCF	3/8″ - 18 NPSM Male	3/4″ - 14 Male Hose
E2JKRCF	13/16″ - 24 UNS Female	3/4″ - 14 Male Hose
E20JKCP	3/8″ - 18 NPT Male	3/8″ - 18 NPSM Female
E31JKABCP	13/16″ - 24 UNS Female	E1 Quixtop
Vacuum Breaker		
E22JKCP	3/8″ - 18 NPT Male	3/8″ - 18 NPT Female
E22JKTPF*	3/8″ - 18 NPT Male	3/8″ - 18 NPT Female
E23JKABCP	3/8″ - 18 NPT Female	3/8″ - 18 NPT Male
E27JKCP	3/4″ Hose Thread Female	3/4″ - 11-1/2 Male Hose

*Tin Plated

Handles

Model		Description
Mechanical		
	317-PRJKCP	Vandal Proof 4″ Wristblade, Sixteen-Point Tapered Broach
	319-PRJKCP	Vandal Proof 6″ Elbow Blade, Sixteen-Point Tapered Broach
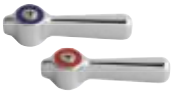	369-PRJKCP	Vandal Proof 2-3/8″ Lever, Sixteen-Point Tapered Broach
	386-010KJKCP	3-1/2" oscillating handle assembly
	390-PRJKCP	Vandal Proof 2-3/8″ Lever, Sixteen-Point Tapered Broach
	401-PRJKCP	Designer 3-7/8" Lever, Eight-Point Tapered Broach
	633-PRJKCP	Vandal Proof 3″ Cross, Eight-Point Tapered Broach
	636-PRJKCP	Vandal Proof 2-1/8″ Single Wing Canopy, Eight-Point Tapered Broach
	950-PRJKCP	Vandal Proof 2-1/2″ Three-Wing Canopy, Eight-Point Tapered Broach
	1000-PRJKCP	Vandal Proof 2″ Canopy Single Wing, Sixteen-Point Tapered Broach
Metering		
	335-007KJKCP 335-107KJKCP 335-207KJKCP	Vandal Proof 1-1/2″ Push-Tilt, Twenty-Point Broach Cold Index Hot Index Push Index
	336-402KJKCP 336-403KJKCP 336-404KJKCP	Vandal Proof 2-13/16″ Push-Tilt, Twenty-Point Broach Cold Index Hot Index Push Index
	665-PSHJKCP	Vandal Proof 1-3/4″ MVP Metering Push

Cartridges

Quaturn™

- Gradual stop, closes with water pressure
- 90° turn

Model	Description
Short Stem with Exposed Cap	
1-099XTJKABNF	Right Hand
1-100XTJKABNF	Left Hand
Long Stem with Concealed Cap	
377-XTRHJKABNF	Right Hand
377-XTLHJKABNF	Left Hand
Short Stem with Exposed Cap - Control-A-Flo Feature	
1-099-245JKABNF	Right Hand
1-100-245JKABNF	Left Hand
Long Stem with Concealed Cap - Control-A-Flo Feature	
377-X245RJKABNF	Right Hand
377-X245LJKABNF	Left Hand

NAIAD™

- Immediate-off or adjustable-closure versions
- Available for pedal box and knee valve applications

Model	Description
Exposed Cap	
333-XPSHJKABNF	Immediate-off
333-XSLOCJKABNF	Adjustable-closure, Indexed "C"
333-XSLOPJKABNF	Adjustable-closure, Indexed "Push"
335-XJKABNF	Adjustable-closure, for Tip-Tap and Duckbill Handles
386-XSLOJKNF	Adjustable-closure, for 386-010KJKCP Handles
409-XJKABNF	Adjustable-closure, for Tip-Tap and Duckbill Handles
For Pedal Box Applications	
625-XJKABNF	Immediate-off, High Flow
625-XSLOJKABNF	Adjustable Cycle Time Closure, High Flow
628-XJKABNF	Immediate-off, Low Flow
628-XSLOJKABNF	Adjustable Cycle Time Closure, Low Flow

Ceramic

- 90° turn, positive stop

Model	Description
Short Stem with Exposed Cap	
1-099XKJKABNF	Right Hand
1-099XKCJKABNF	Right Hand with Integrated Check Valve
1-100XKJKABNF	Left Hand
1-100XKCJKABNF	Left Hand with Integrated Check Valve
Long Stem with Concealed Cap	
377-XKRHJKABNF	Right Hand
377-XKLHJKABNF	Left Hand
977-XKCRHJKABNF	Right Hand with Integrated Check Valve
977-XKCLHJKABNF	Left Hand with Integrated Check Valve

MVP™ Compression

- Self-closing
- Adjustable 2-25 second cycle time

Model	Description
Complete Cartridge	
665-RKPCP	Handle, Actuator Assembly, Valve
667-080KJKABNF	Actuator Assembly, Valve
Cartridge Parts	
665-190KJKABNF	Actuator Assembly Only
671-XJKABNF	Valve with Filter Screen
672-XJKABNF	Instant Shut-off Valve - Bubbler

Slow Compression

- Gradual stop
- 180° to 360° turn for fine adjustment

Model	Description
Short Stem with Exposed Cap	
217-XTRHJKABNF	Right Hand, 180° Turn
217-XTLHJKABNF	Left Hand, 180° Turn
Long Stem with Concealed Cap	
274-XTRHJKABNF	Right Hand, 180° Turn
274-XTLHJKABNF	Left Hand, 180° Turn
Stop Valve Cartridge with Integral Check	
376-CXJKABNF	Loose Key Cap, 360° Turn
376-CXSTJKABNF	Loose Key Cap, 360° Turn, High-temperature

Klo-Self™

- Self-closing, immediate-off

Model	Description
825-XJKABNF	For Concealed Cap Installations
826-XJKABNF	For Exposed Cap Installations

Supply Arms

3/8" offset inlet supply arm

Model	Description
GJKABCP	Standard, polished chrome finish
GCJKABCP	With integral check, polished chrome finish

4-1/8" 90-degree inlet supply arm

Model	Description
EAJKABCP	Integral shutoff stop and tee handle, polished chrome finish
EACJKABCP	Integral shutoff stop, check and tee handle, polished chrome finish

1-1/2" straight inlet supply arm

Model	Description
WXJKABCP	Standard, polished chrome finish

3-1/2" straight inlet supply arm

Model	Description
EJKABCP	Control valve and tee handle, polished chrome finish
ECJKABCP	Control valve, check and tee handle, polished chrome finish

2" straight inlet supply arm

Model	Description
WJKABCP	Integral wall flange, polished chrome finish
WXFJKABCP	Separate wall flange, polished chrome finish

Supply inlet extension

Model	Description
EX2JKCP	Straight 2", polished chrome finish
EX5JKCP	Straight 5", polished chrome finish

2-1/2" offset inlet supply arm

Model	Description
HJKABCP	Standard, polished chrome finish
HJKABRCF	Standard, rough chrome finish
HCJKABCP	Integral check, polished chrome finish
RJKABCP	Integral shutoff, polished chrome finish
RJKABRCF	Integral shutoff, rough chrome finish
RCJKABCP	Integral check and shutoff, polished chrome finish

90-degree inlet supply arm

Model	Description
WXAJKABCP	1-1/2", polished chrome finish
SSJKABCP	2-1/2", polished chrome finish
LSJKABCP	8", polished chrome finish

CHICAGO FAUCETS
Geberit Group

The Smart Choice
For Commercial Faucet Solutions.

We can help take the hassle out of selecting the right products for your project. To learn more about the options available, visit our website or contact us directly to discuss your requirements today.

Call: 847/803-5000
Write: customerservice.us@chicagofaucets.com

Visit: chicagofaucets.com/support/where-to-buy to find your Sales Representative or a Chicago Faucets plumbing distributor near you.

CHICAGO FAUCETS
Geberit Group

Chicago Faucets, a member of the Geberit Group, is the leading brand of commercial faucets and fittings in the United States, offering a complete range of products for schools, laboratories, hospitals, office buildings, food service, airports, and sports facilities. Whatever your requirements may be, Chicago Faucets offers standard and made-to-order products that are designed to meet any commercial application.

© 2022 The Chicago Faucet Company. Product specifications subject to change without notice.

CF2147 08/22

2100 South Clearwater Drive, Des Plaines, IL 60018
Phone: 847/803-5000 | Fax: 847/849-1845 | Technical: 800/832-8783 | **www.chicagofaucets.com**