Electronic Faucets

For Patient Care Applications

CHICAGO FAUCETS®
Geberit Group

CHICAGO FAUCETS®
Geberit Group

Electronic Faucets for Patient Care Applications (PCA)

In hospital rooms or patient rooms in nursing care facilities, Chicago Faucets offers a single source solution for the highest quality faucets, shower valves, bed pan cleaners, and grab bars. We have developed and tested a line of electronic faucets specifically for patient care applications.

In addition to improved hygiene and added convenience, our faucets deliver:

ECAST®

Our ECAST faucets are designed to meet new low lead initiatives and are manufactured with less than one quarter of one percent (0.25%) total lead content by weighted average.

ADA Compliant

The Americans with Disabilities Act establishes accessibility guidelines for many products. Chicago Faucets offers an array of products that meet the requirements for ADA compliance.

Next Day Shipping

Most Chicago Faucets products will ship within 5 days. Products featured in our CF*Now!* program are available for shipment within 24 hours. Visit our website for a complete list of products.

Specified. Installed. Preferred.

Since 1901, Chicago Faucets has been the leader in commercial faucet quality and innovation. Today, you can find our products in leading healthcare facilities all across the country. The reason? We take the hassle out of selecting the right plumbing fixture for your application. This frees you to focus on your central mission: providing a safe, clean, comfortable environment. Here are just a few places where you can find our faucets:

Brigham and Women's Hospital
Cedars Sinai Hospital
Cleveland Clinic
Johns Hopkins Hospital
Kaiser Permanente
Massachusetts General Hospital
Mayo Clinic
Memorial Sloan-Kettering Cancer Center
Ronald Reagan Medical Center - UCLA
Shriners Children's Hospital
St. Jude Heritage Medical Group
University of Iowa Medical Labs
University of Michigan Hospital
University of Pittsburgh Children's Hospital
Veteran's Administration Hospitals

Water and the battle against bacteria within healthcare facilities.

From reinforcing hand-hygiene compliance to utilizing an arsenal of water treatment procedures, the campaign against the spread of bacteria is a primary concern among hospitals and long-term healthcare centers across the country. Water is an essential ingredient in the effort. Ironically, water also contains small amounts of bacteria – making this battle even more challenging.

Hygiene, hand-washing, and electronic faucets.

For years, electronic faucets have been installed and have effectively improved hygiene, accessibility, and water efficiency. However, recent studies have raised concern that electronic faucets can elevate waterborne bacteria to a level that is higher than that found with conventional manual faucets. While most individuals are not at risk for infection by these bacteria, any increase is reason for concern in health care environments. Many health institutions are looking for ways to reduce exposure among individuals that might have a higher risk of contracting Legionnaires' disease.

The HyTronic® PCA

A new option for electronic faucets in patient care applications.

HyTronic PCA is a new line of faucets designed specifically for patient care applications to complement your existing efforts. HyTronic PCA faucets offer touch-free, dual beam design that provides quick response time and the added safety of improved hygiene. Most of all, they limit the tested microbial contamination to a level statistically similar to standards set by a conventional manual faucet.

Tested and validated by a nationally-recognized testing laboratory.

To validate our design assumptions, these products were extensively tested and monitored for both heterotrophic plate count (HPC) and Legionella bacteria. We utilized the test facilities at the University of Pittsburgh and had a culture and sample analysis performed by Special Pathogens Laboratory. SPL is a nationally-recognized analytical microbiology laboratory that specializes in the detection, control, and remediation of waterborne pathogens such as Legionella.

You will find a summary of the testing results at the back of this brochure. For the complete testing report, contact your sales representative or call Chicago Faucets customer service at 847-803-5000.

CHICAGO FAUCETS®
Geberit Group

Above-deck rugged and unparalleled

design, durability, reliability.

Cast brass construction
High-quality brass casting with a refined finish for unrivaled durability.

Remote control technology
Switch modes and adjust faucet settings from the palm of your hand.

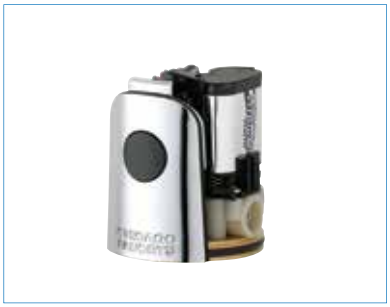

Easy to service
Components are located above deck and easily accessible.

PCA-specific operating modes
Can be programmed for scrub, metering, and cleaning modes.

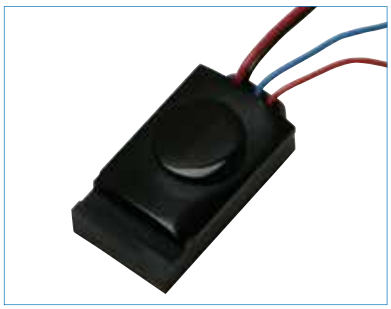

Dual-beam activation
Quick, reliable activation without ghosting.

Low power solenoid valve
Provides high-speed cycle rate, quiet operation, and are easily accessible.

The HyTronic® PCA

Traditional styling and durable solid brass construction flow seamlessly into any interior design. Above-deck electronics provide years of superior durability and convenience.

- Choice of power source – battery, hard-wire or plug-in
- Emergency Backup Power System (EBPS) available on select AC models
- Available with internal and user-adjustable mixers for temperature control
- Copper tube inlets

DC – Battery Powered

Model #	Supply	GPM / LPM	Mixer
116.590.AB.1	Single	2.2 / 8.3	n/a
116.614.AB.1	Dual	1.5 / 5.7*	Internal
116.592.AB.1	Dual	1.5 / 5.7*	User Adjustable

AC – Hard-wire or Plug-in

Model #	Supply	GPM / LPM	Mixer	EBPS
116.591.AB.1	Single	2.2 / 8.3	n/a	n/a
116.615.AB.1	Dual	1.5 / 5.7*	Internal	n/a
116.607.AB.1	Single	2.2 / 8.3	n/a	■
116.593.AB.1	Dual	1.5 / 5.7*	User Adjustable	n/a
116.608.AB.1	Dual	1.5 / 5.7*	User Adjustable	■

*Note: model features 1.5 GPM (5.7 LPM) antimicrobial laminar outlet

EBPS

Emergency Backup Power System

Models with an emergency backup power system (EBPS) are now available! Our new Emergency Backup Power System (EBPS) allows you to install an AC-powered faucet with an integrated backup power system. EBPS gives you peace of mind, knowing that these electronic faucets will continue to deliver the necessary water during a power outage.

CHICAGO FAUCETS
Geberit Group

Gooseneck styling combines the iconic look with the technological superiority of our HyTronic product line. The end result is a faucet that delivers advanced functionality.

- Choice of power source – battery, hard-wire or plug-in
- Emergency Backup Power System (EBPS) available on select AC models
- Available with internal and user-adjustable mixers for temperature control
- Factory programmed for automatic hygiene flush
- Copper tube inlets

DC – Battery Powered

Model #	Supply	GPM / LPM	Mixer
116.594.AB.1	Single	2.2 / 8.3	n/a
116.617.AB.1	Dual	2.5 / 9.5	n/a
116.596.AB.1	Dual	2.5 / 9.5	User Adjustable

AC – Hard-wire or Plug-in

Model #	Supply	GPM / LPM	Mixer	EBPS
116.595.AB.1	Single	2.2 / 8.3	n/a	n/a
116.616.AB.1	Dual	2.5 / 9.5	Internal	n/a
116.609.AB.1	Single	2.2 / 8.3	n/a	■
116.597.AB.1	Dual	2.5 / 9.5	User Adjustable	n/a
116.610.AB.1	Dual	2.5 / 9.5	User Adjustable	■

Hard-wire or Plug-in

You can connect AC powered faucets directly into your existing system with a choice of a multi-use hard-wire transformer or a convenient plug-in transformer.

Research To Investigate Bacteria Growth in Electronic Faucets

Overview

Bacterial contamination of hot water systems is a common problem in large commercial facilities. Buildings such as hospitals, long-term health care centers, and hotels have large, complicated hot water distribution systems, and the growth of bacteria within these systems can cause both structural damage due to microbially-induced corrosion and human infection.

Legionella pneumophila are gram-negative bacteria which cause Legionnaires' disease, a potentially fatal form of pneumonia. Average, healthy individuals are not at high risk for infection by these bacteria, but individuals possessing a number of predisposing risk factors (elderly, immunocompromised, smoker, etc.) are at greater risk of contracting Legionnaires' disease should they be exposed to a contaminated source. Building hot water systems are sources of exposure to Legionella that have been linked to the cases of Legionnaires' disease in several instances [Colville et al. 1993, Goetz et al. 1998, Shands et al. 1985].

Heterotrophic plate count (HPC) measurements provide a generalized indicator of microbial water quality. They are used to determine water treatment process effectiveness (HPC before treatment vs. HPC after treatment), as well as to indicate if conditions which increase rates of microbial re-growth (i.e. high temperatures, lack of residual disinfectant, availability of nutrients, etc.) are present in a given environment. Although most HPC are not pathogenic, the relative presence/absence of microbial growth may be used as an indicator of the potential presence of pathogens (i.e., water with a large quantity of bacteria is more likely to have pathogens than water with very little bacteria).

Previous Research

In 2011, a study conducted by a leading healthcare institution indicated that sensor faucets are more susceptible to bacterial contamination and colonization than standard manual supply faucets.

Scope Of and Reason For Additional Research

The study was based on evidence gathered from faucets installed in a real life situation and the comparison was limited to only one specific electronic faucet product and one reference manual faucet. A second study, conducted by the University of Pittsburgh under guidance of Special Pathogens Laboratory and financed by Chicago Faucets, was performed to determine whether these field observations could be reproduced under well-controlled laboratory conditions.

Research Objectives

The key objectives of this laboratory study were:
(a) to determine if electronic faucets are any different from standard mechanical faucets in promoting Legionella growth, and
(b) determine if there is any difference between these two faucet types in terms of the efficacy of standard disinfection practice (free chlorine addition) for Legionella eradication.

Test setup and process

A model system was constructed to test nine electronic faucet varieties, which were compared with a "control" faucet (manual faucet). The electronic group contained a selection of standard catalog products, among them the product used in the Johns Hopkins study, and modified products to represent different combinations of features that may or may not contribute to microbial growth. Total HPC and Legionella bacteria were cultured from each set of faucets (each faucet type was represented by three faucets) and the data was analyzed for statistical significance of different factors in promoting biological colonization. An automated faucet flushing process controller was installed on the test sensor faucet system in order to simulate daily faucet usage within a typical commercial facility. All faucets were set to remain open for the duration of the investigation, and the passage of water through each faucet was controlled using solenoid valves. The opening and closing of these valves was programmed electronically to simulate realistic commercial water demand.

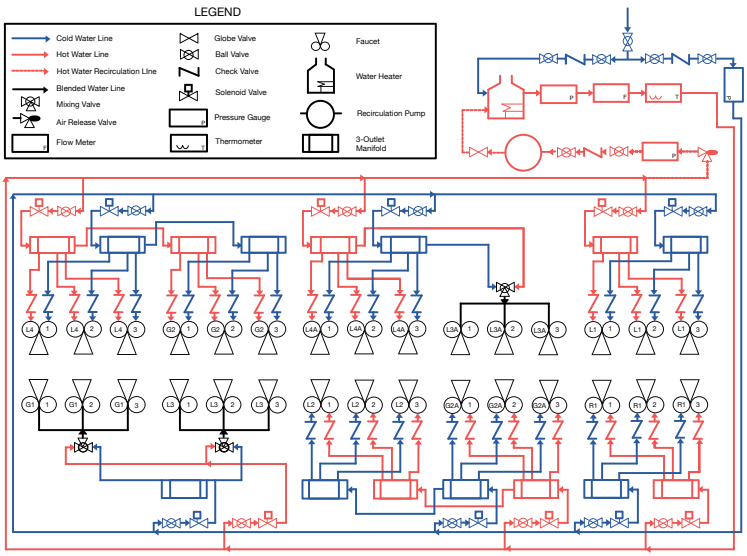

Legionella bacteria was prepared using a model cooling tower system supplied with municipal water. The tower was allowed to operate continuously for approximately one week, and subsequent testing indicated Legionella concentrations in excess of 10,000 CFU/mL. A measured volume of this solution was fed into the system to achieve an initial Legionella concentration of approximately 500 CFU/mL. The test was monitored for four weeks prior to a chlorination effort and two weeks post-chlorination. To disinfect the system, a volume of 45.4 mL of 6% bleach was added to the faucet system's holding tank, mixed, and circulated through the system for 2 hours and 20 minutes. Following disinfection, system flushing was re-enabled and system operation resumed.

Results

In order to evaluate the significance of the observed differences between bacteria concentrations among different faucet groups, statistical analyses were performed using the collected data.

Legionella

It was found that each of the nine electronic faucets had an average concentration of Legionella bacteria that was comparable to the control faucet prior to chlorination. The mean difference of the faucet with the highest Legionella concentration prior to chlorination and the reference faucet was only 0.16 log CFU/mL.

Post-chlorination analyses also compared each sensor faucet to the control faucet, and the results indicate that five faucets demonstrated Legionella concentrations that were statistically equivalent to that of the control faucet. Two faucets, among them the one electronic faucet that was tested in the healthcare study, had Legionella concentrations that were more than 1.0 log higher than the control faucet.

HPC (Heterotrophic plate count)

Prior to chlorination, each of the electronic faucets harbored a population of total HPC which was equal to or greater than that of the control faucet. Five of the faucets were statistically indistinguishable from the control faucet. Four faucets demonstrated average pre-chlorination concentrations which were higher than those demonstrated by the reference faucet. The difference between the average concentration of the electronic faucet and the control faucet ranged from 0.03 log CFU/mL to 0.71 log CFU.

Post-chlorination comparisons of each of the sensor faucets with the control faucet indicate that one faucet maintained a population of HPC which was statistically equivalent to that of the control faucet. Two faucets, among them the one electronic faucet that was tested in the Johns Hopkins study, demonstrated microbial counts greater than 1.0 log higher than the control, while all remaining faucets demonstrated microbial concentrations that ranged from 0.22-0.37 log above that of the control.

Summary

This study was performed in a well-controlled lab environment by the University of Pittsburgh under guidance of Special Pathogens Laboratory, The Legionella Experts, and financed by Chicago Faucets. The objective was to determine if electronic faucets are any different from standard mechanical faucets in promoting Legionella growth and if there is any difference between these two faucet types in terms of the efficacy of standard disinfection practice.

Statistical analysis of experimental results obtained during the pre-chlorination phase revealed that there is no significant difference in the ability of sensor faucets to promote Legionella colonization when compared to a standard mechanical faucet.

Sensor faucets did harbor higher concentrations of HPC compared to mechanical faucets. The findings demonstrated that some faucets fostered higher microbial concentrations during regular usage. Conversely, other faucet types demonstrated the lowest microbial concentrations among sensor faucets.

Disinfection of the faucet system was performed five weeks into the trial.

Statistical analysis revealed that five electronic faucets did not demonstrate a statistically significant difference in Legionella concentration from the control faucet after chlorination. These results were confirmed using disinfection log reduction of HPC bacteria from pre- to post-chlorination.

Following disinfection, three electronic faucets continued to foster the highest microbial concentrations (HPC), while five other faucets were not statistically different when compared to the levels observed in a standard mechanical faucet.

Overall, it can be said that selected and modified electronic faucets perform as well as the mechanical reference faucet when it comes to promoting Legionella colonization and HPC. Based on the results of this study, Chicago Faucets offers a selection of four modified electronic faucet products with both AC and DC power options. For more information on these products consult a Chicago Faucets representative.

Credentials: Special Pathogens Laboratory provides the healthcare and water treatment industries, hotels, and commercial and industrial sectors a comprehensive solution for the prevention and control of Legionella. Founded by Dr. Janet Stout and Dr. Victor Yu, internationally recognized experts in Legionnaires' disease.

CHICAGO FAUCETS
Geberit Group

We are a member of the U.S. Green Building Council and support the Leadership in Energy and Environmental Design (LEED) Green Building Rating System™, to measure the efficiency and sustainability of buildings in the U.S. and Canada. If you are trying to achieve LEED Certification for your building, our low-flow outlets, metering cartridges, and sensor-operated faucets can contribute points in these areas: Water Efficiency Credit 2: Innovative Wastewater Technologies and Water Efficiency Credit 3: Water Use Reduction

We are proud to be a partner with WaterSense®, sponsored by the EPA and designed to protect the future of our nation's water supply by promoting efficiency and enhancing the market for water efficient products, programs, and practices.

We are a charter sponsor of the Alliance for Water Efficiency, a non-profit organization that is dedicated to the efficient and sustainable use of water. It brings together a diverse range of stakeholders to advocate water efficiency and conservation.

CHICAGO FAUCETS®
Geberit Group

Chicago Faucets, a member of the Geberit Group, is the leading brand of commercial faucets and fittings in the United States, offering a complete range of products for schools, laboratories, hospitals, office buildings, food service, airports, and sports facilities. Whatever your requirements may be, Chicago Faucets offers standard and made-to-order products that are designed to meet any commercial application.

The Chicago Faucet Company
2100 South Clearwater Drive
Des Plaines, IL 60018
Phone: 847/803-5000
Fax: 847/803-5454
Technical: 800/832-8783
www.chicagofaucets.com

Contains 30% post-consumer recycled paper