Repair Parts

SH-TP1-06-100

Thermostatic/pressure balancing tub and shower fitting

CHICAGO FAUCETS
Geberit Group

Thermostatic/Pressure Balancing Tub and Shower Valve
1920-VONF

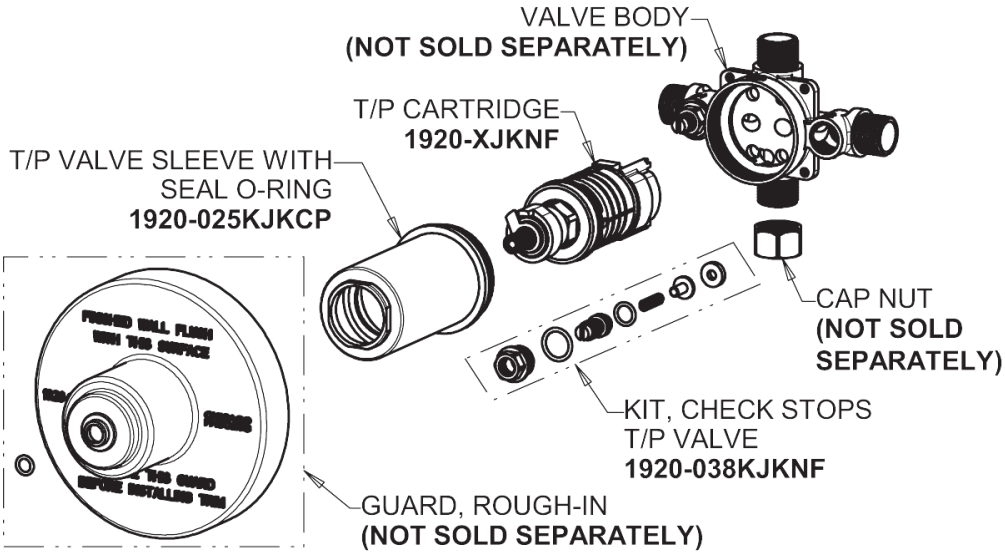

SH Series Trim Kit
SH-TK1-00-000

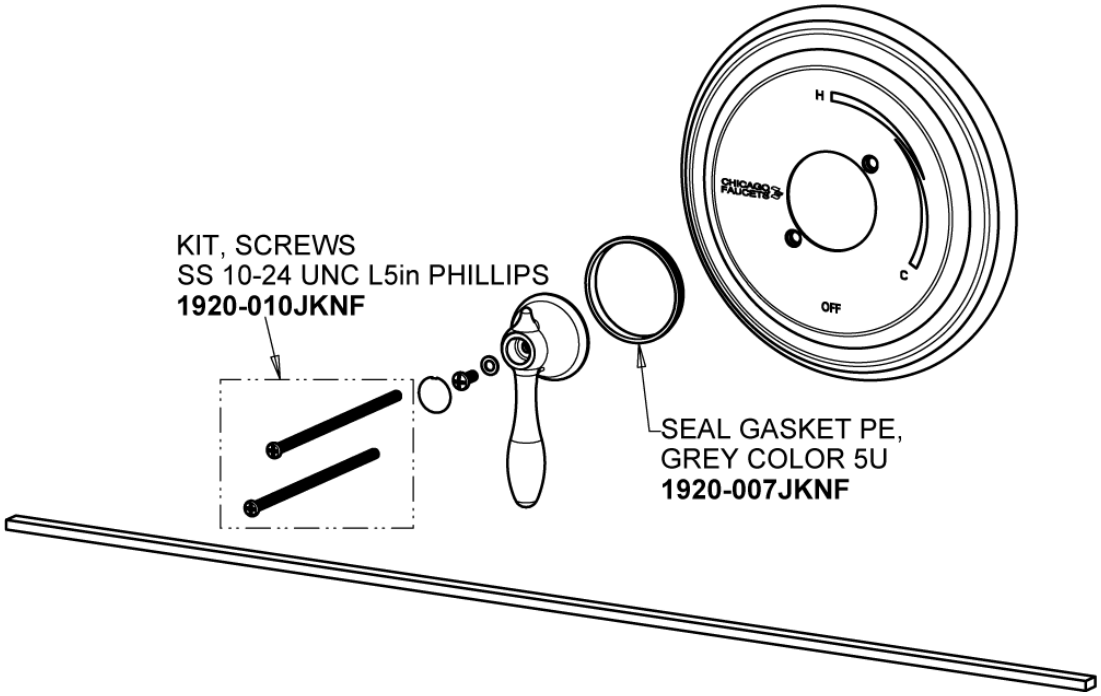

For Technical Assistance:

Phone: 800-TEC-TRUE (832-8783)
Email: techsupport.us@chicagofaucets.com

2100 South Clearwater Drive
Des Plaines, IL 60018
Phone: 847-803-5000
chicagofaucets.com

Repair Parts

SH-TP1-06-100

Thermostatic/pressure balancing tub and shower fitting

Tub Spout
749-SJKCP

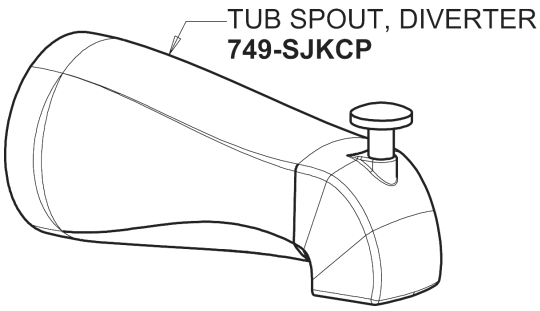

Shower Head and Arm
622-ACP

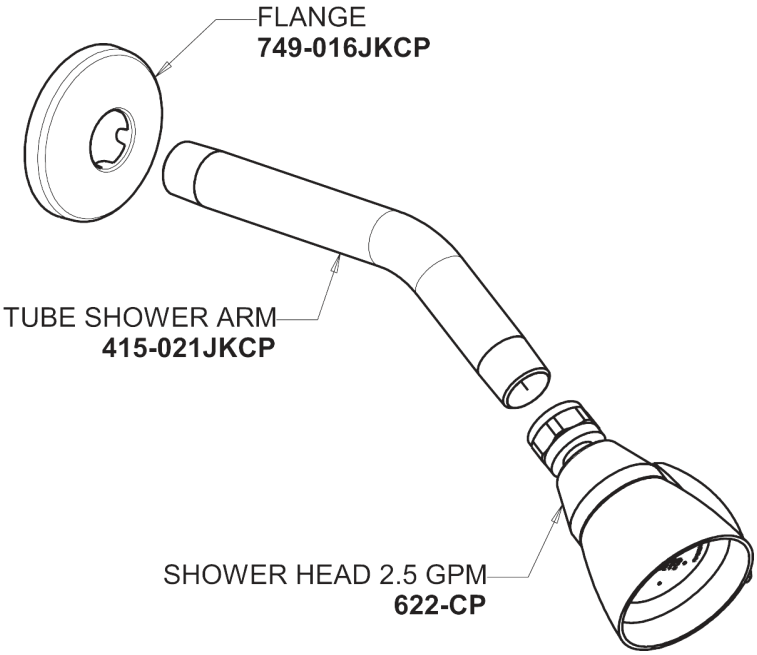

For Technical Assistance:

Phone: 800-TEC-TRUE (832-8783)

Email: techsupport.us@chicagofaucets.com

2100 South Clearwater Drive
Des Plaines, IL 60018
Phone: 847-803-5000
chicagofaucets.com